Dipartimento di Ingegneria dell' Innovazione
Universita' degli Studi di Lecce

Andrea Baschirotto

andrea.baschirotto@unile.it

Analog Filters for Telecommunications

Universita' degli Studi di Bologna

June, 16th-17th, 2005

Introduction

Possible receiver architectures

- (Super)-Etherodyne

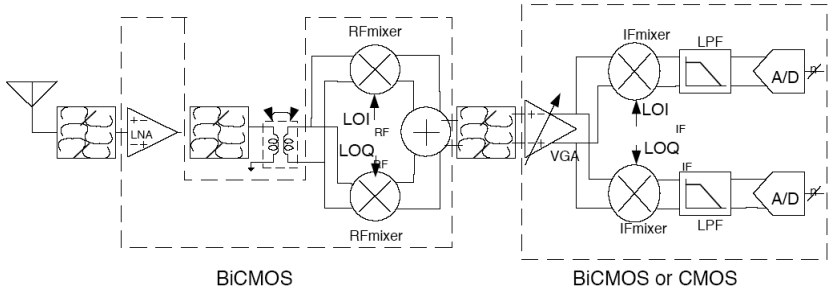

- Low-IF

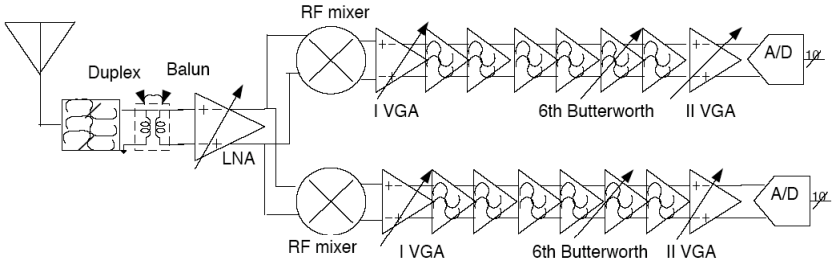

- Direct conversion (Zero-IF)

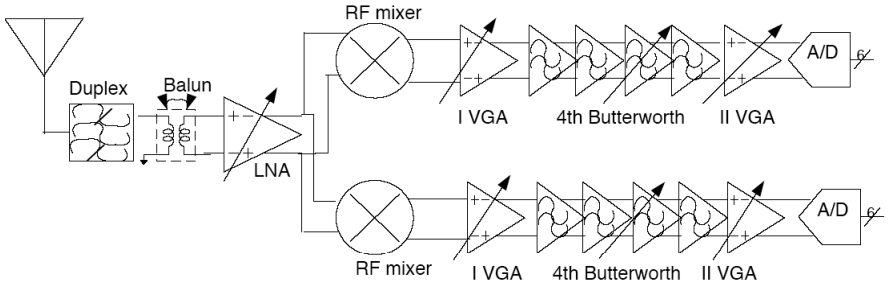

Introduction

- Recently developed receiver uses Direct-conversion (Zero-IF) topologies

  Ex.: WLAN IEEE 802.11.a transceiver (Zhang@RF Micro Devices, ISSCC03)

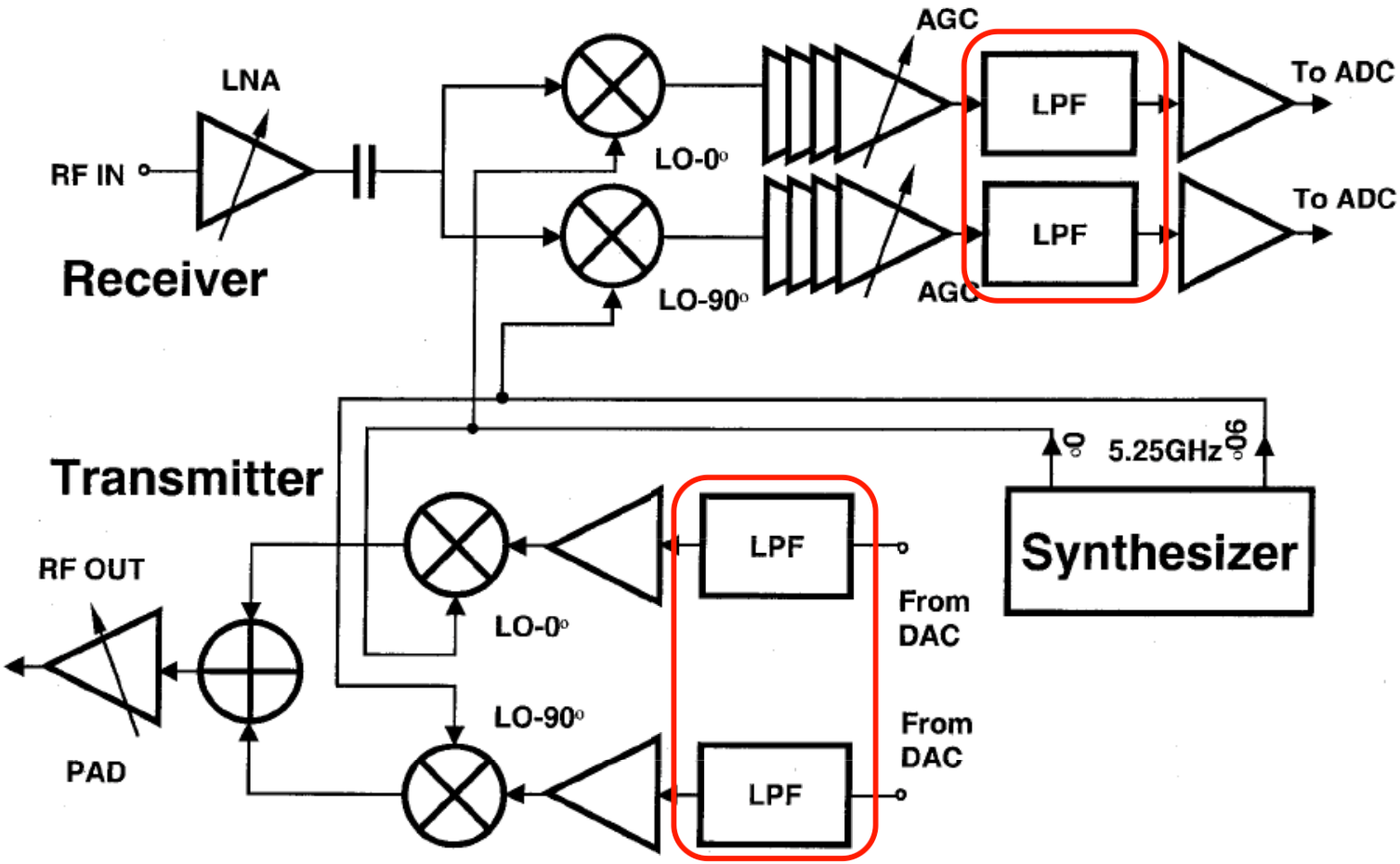

Introduction

- WLAN IEEE 802.11.a transceiver (Bezhad@Broadcom, ISSCC03)

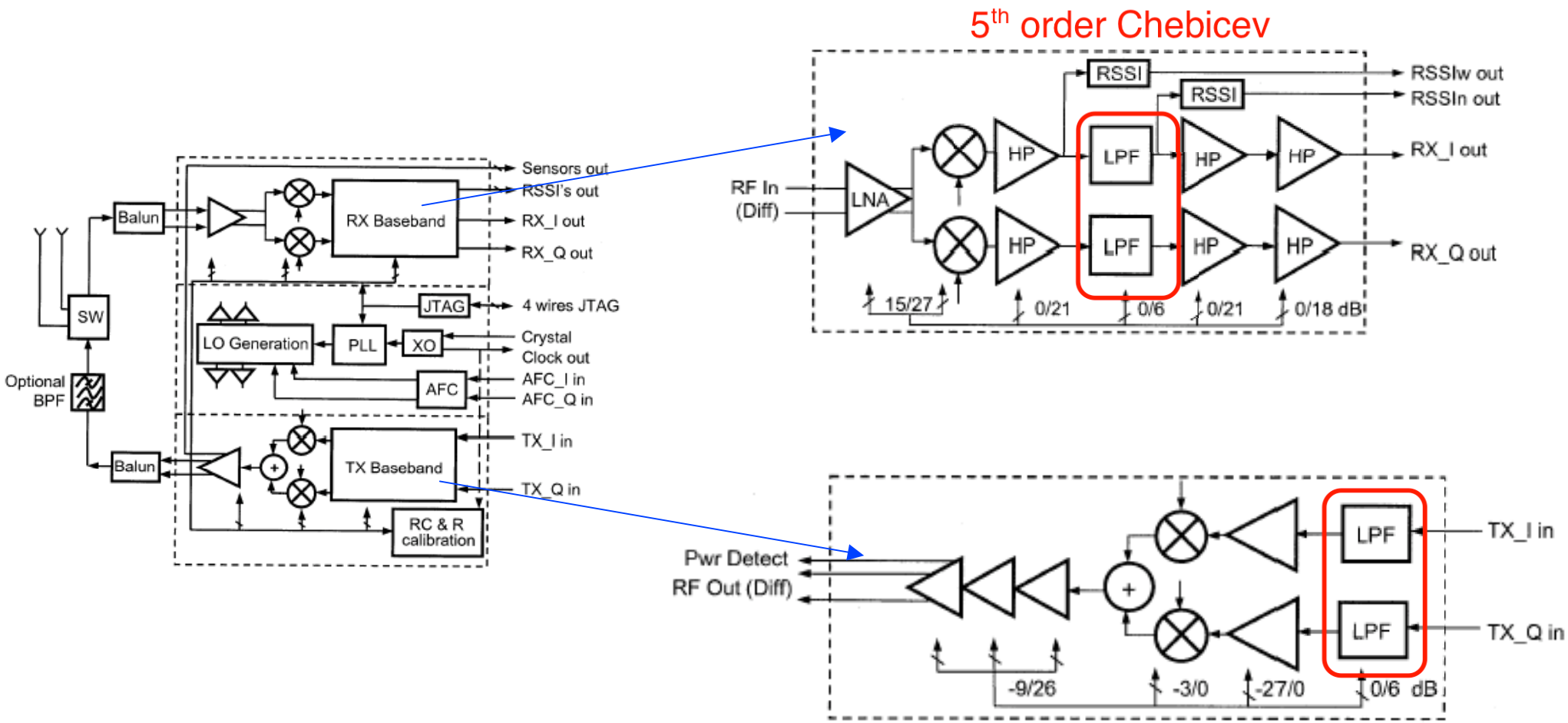

Introduction

- WLAN IEEE 802.11.a transceiver (Vassiliou@Athena Semiconductors, ISSCC03)

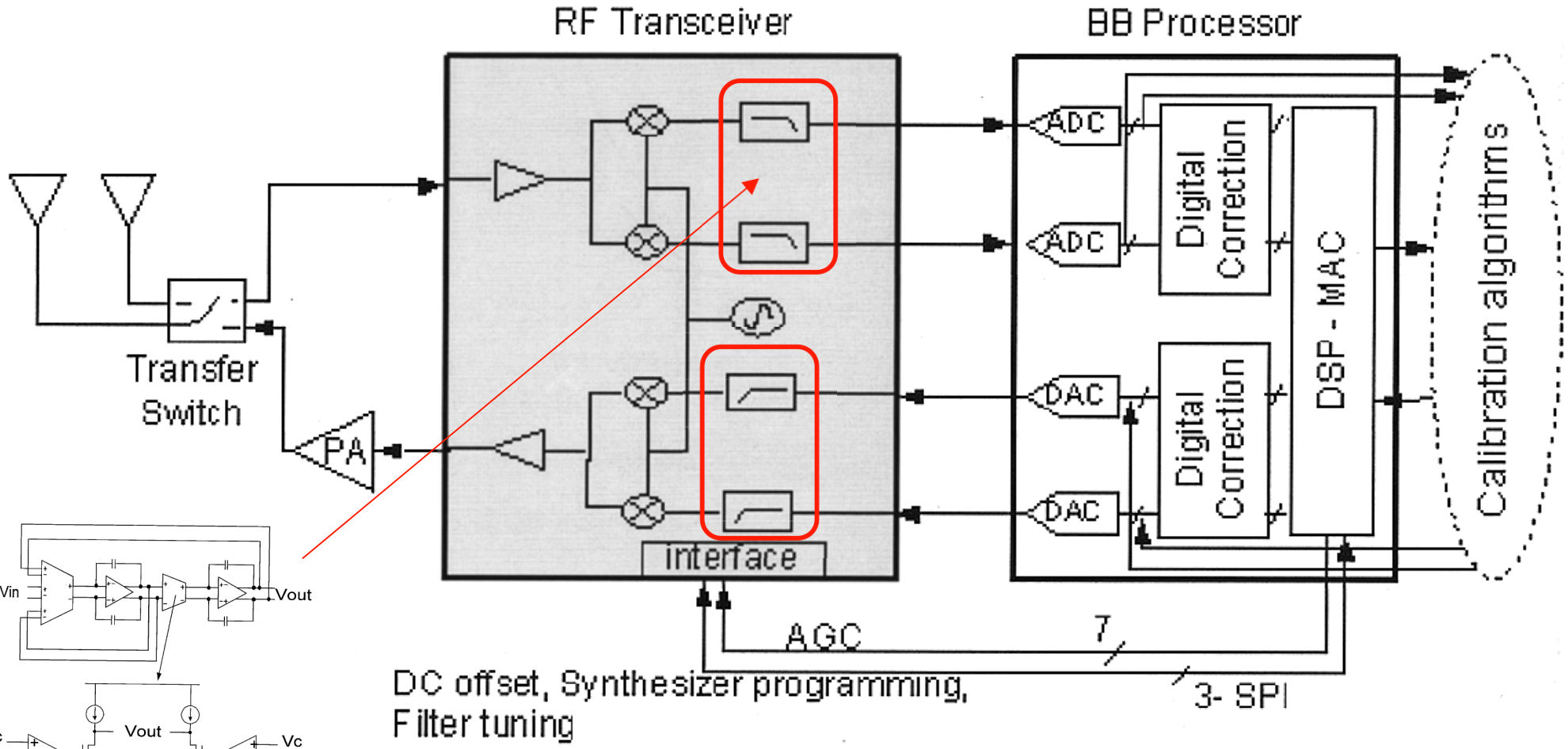

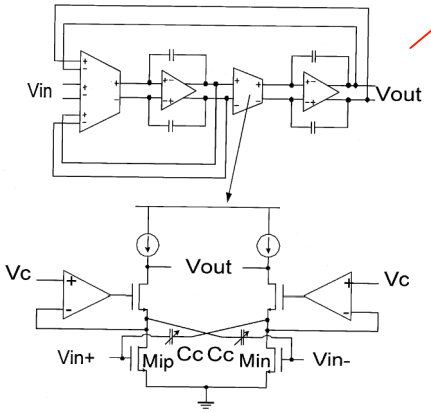

- Gm-C filter implementation

Introduction

- WCDMA receiver (Rogin@ETH-Zurich, ISSCC03)

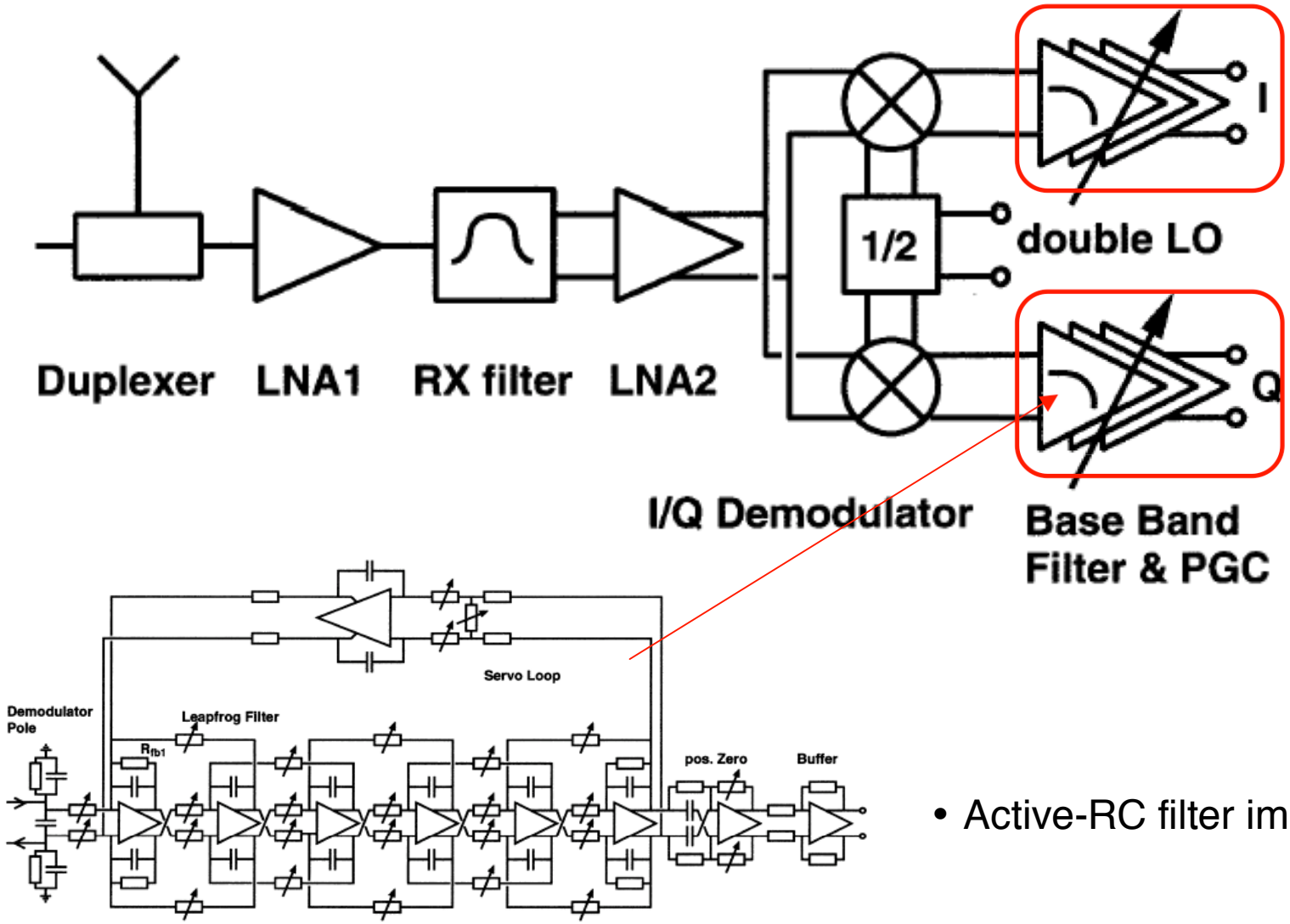

- Active-RC filter implementation

Introduction

- Typically receiver filters are more challenging than transmitter filters

- Antenna GSM Input Spectrum

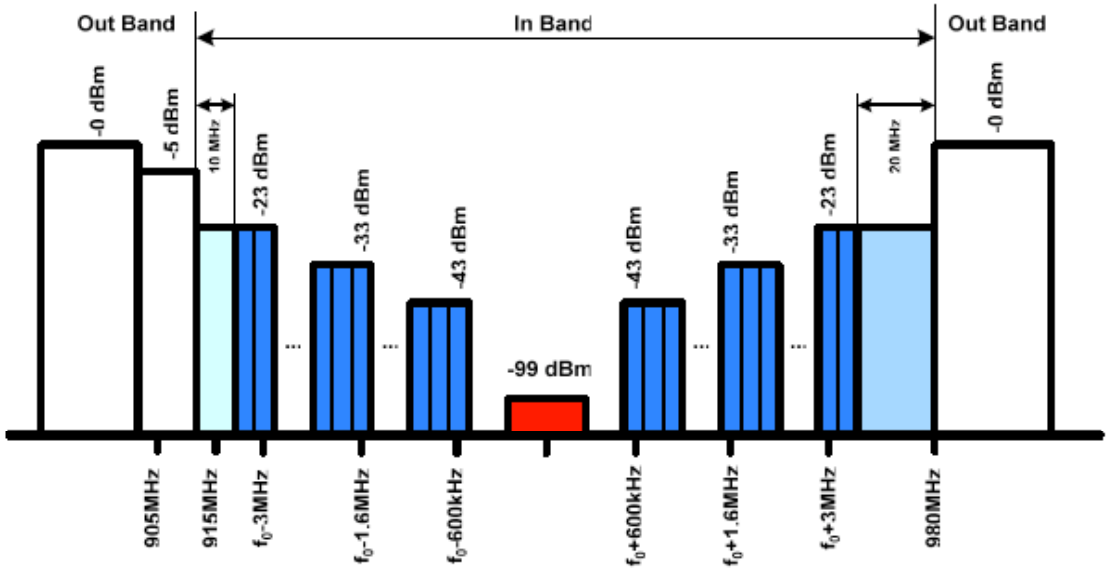

- Baseband GSM Input Spectrum

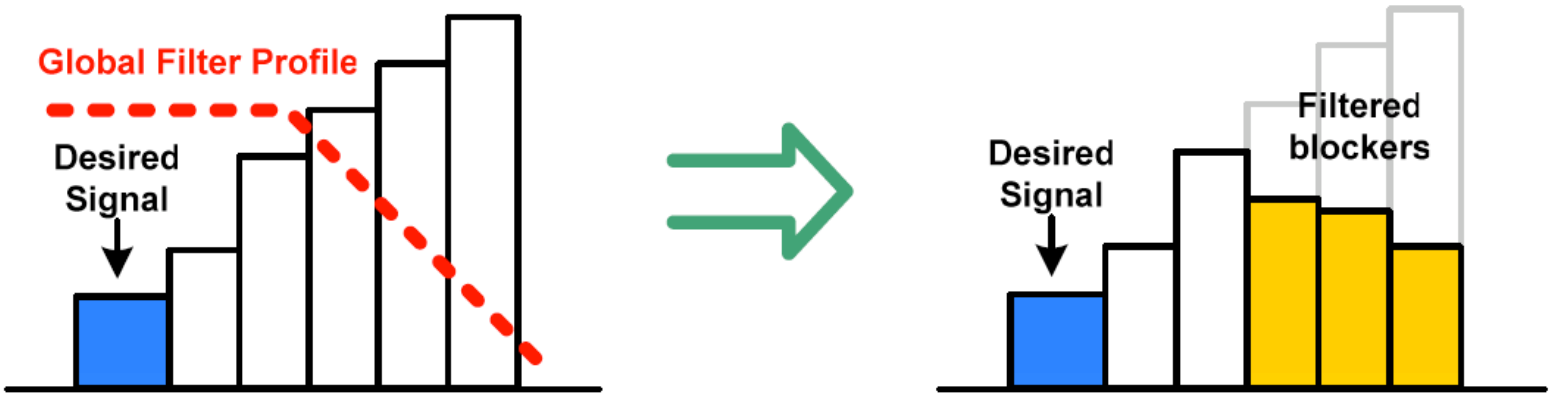

Introduction

Target of RX-filter

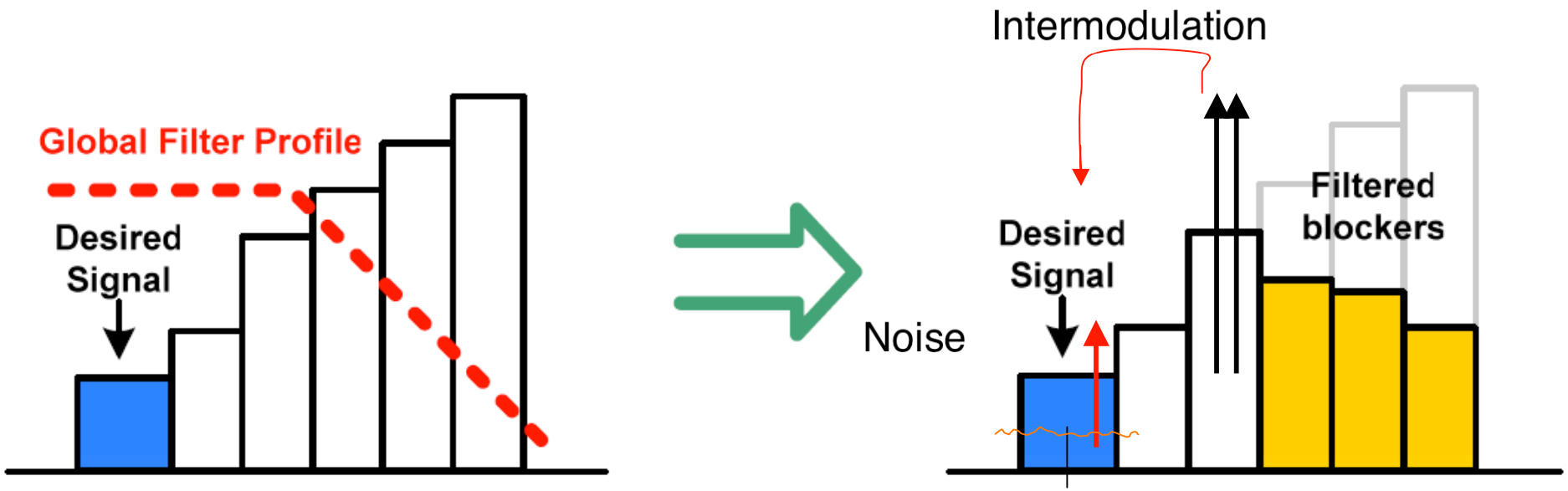

- rejecting out-of-band channels with high-linearity
  - to avoid in-band signal corruption of the intermodulation
- selecting in-band signals with low noise

Introduction

UMTS signal characteristics

- Adjacent channel

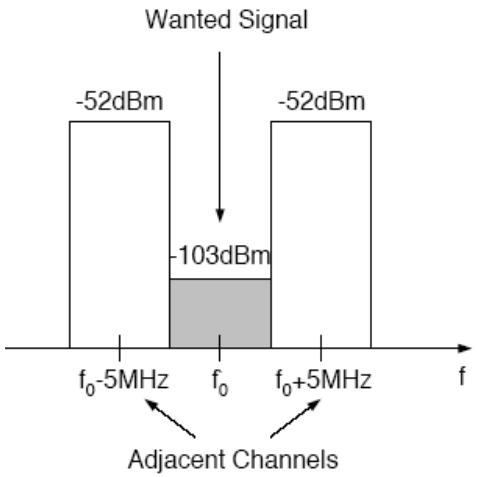

- Blockers

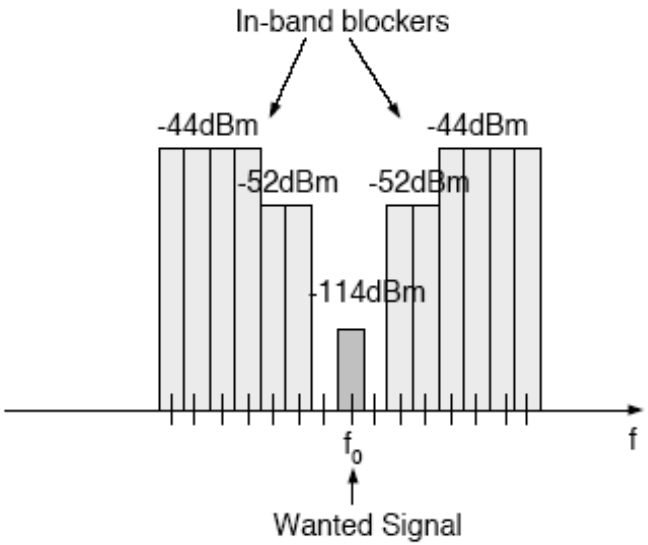

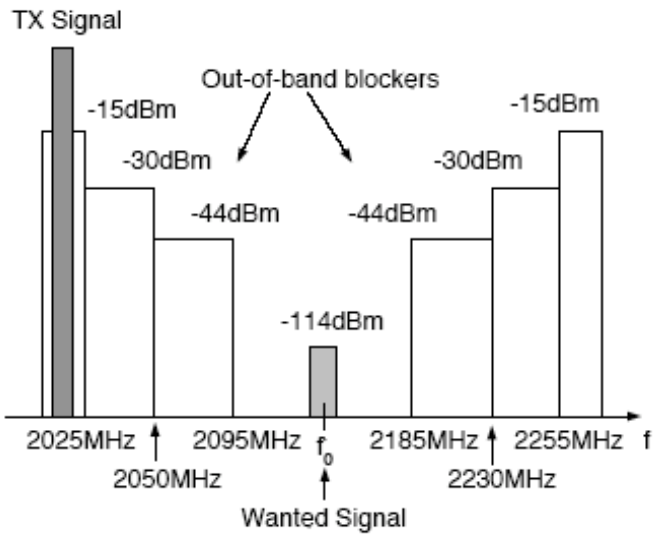

Baseband filters

UMTS receiver testing

- These tests are required for an UMTS receiver:
  - Adjacent channel test
    - In antenna
      - Signal = –103dBm (14dB larger than the sensitivity)
      - Adjacent channel = –52dBm with Δf=5MHz
    - At BB Input (BB configured with the dc-gain 14dB lower than maximum value)
      - Signal = –103dBm + 30dB = –73dBm (@ 1MHz)
      - Adjacent channel = –52dBm + 30dB = -22dBm (@ 5MHz)

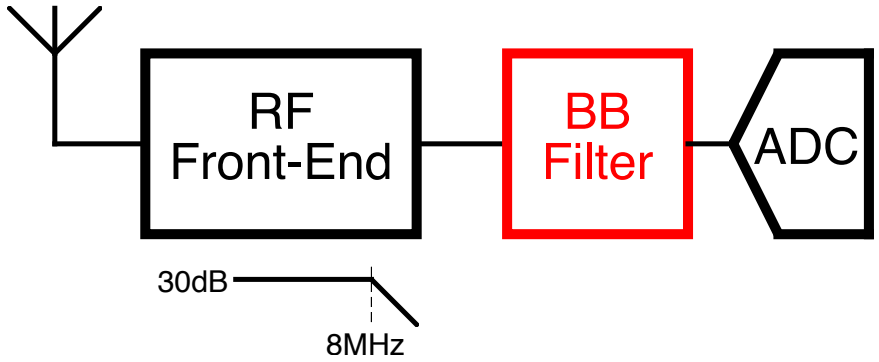

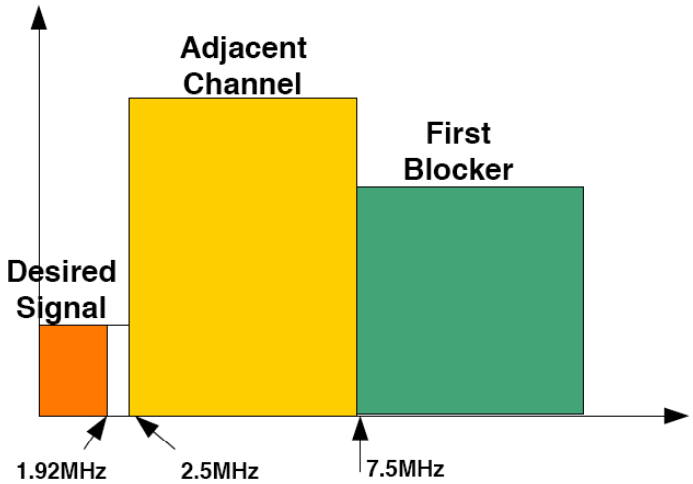

    - TEST: The signal gain compression for AdjChann to be lower than 1dB

Baseband filters

UMTS receiver testing

- In-Band Blockers Test
  - In antenna
    - Signal = –114dBm
    - In-Band Blocker = (–52dBm @ Δf=10MHz) or (-44dBm @ Δf=15MHz)
  - At BB Input (BB configured with the maximum dc-gain)
    - Signal = –114dBm + 30dB = –84dBm (@ 1MHz)
    - In-Band Blocker = –56dBm + 30dB – 4dB (Mixer) = -22dBm (@ 10MHz)

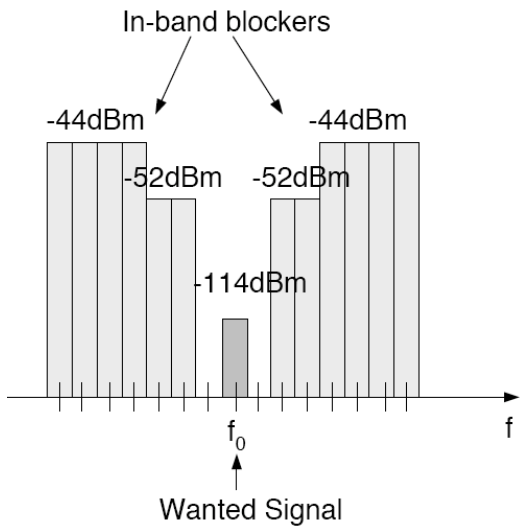

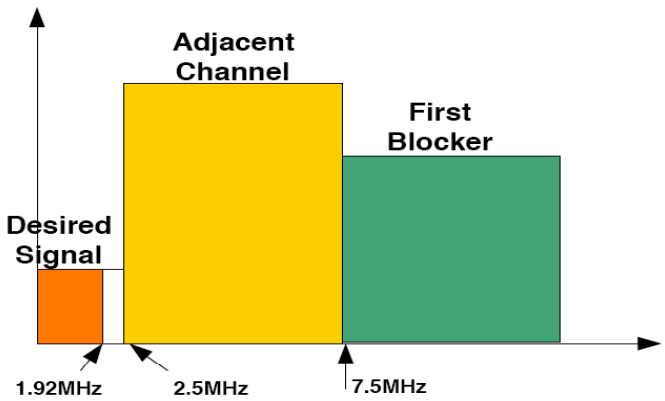

- TEST: The signal gain compression due to In-Band Blocker has to be lower than 1dB

Baseband filters

UMTS receiver testing

- Intermodulation Test
  - In antenna
    - Signal = –114dBm
    - Two Interferers = (–46dBm @ Δf=10MHz) and (-46dBm @ Δf=20MHz)
  - At BB Input (BB configured with the maximum dc-gain)
    - Signal = –114dBm + 30dB = –84dBm (@ 1MHz)
    - Two Interferers = –46dBm+30dB–4dB(Mixer)=–22dBm (@10MHz&20MHz)

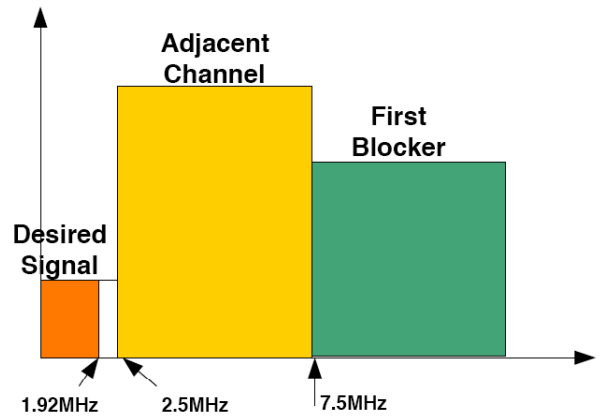

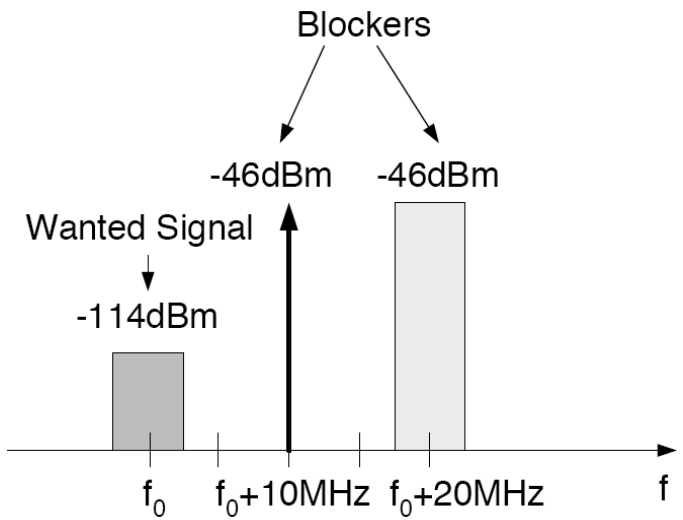

- TEST: The in-band intermodulated component at the BB input has to be lower than the noise level (—99dBm (in antenna) + 30dB (RF-FE Gain) = —69dBm)

Baseband filters

Typical specifications

- Large linear range
  - In-band linear range for avoiding tones intermodulation (OFDM)
  - Out-of-band linear range for avoiding blockers intermodulation

Fully-differential solutions are always adopted

- Accurate frequency response

  To select the signal bandwidth

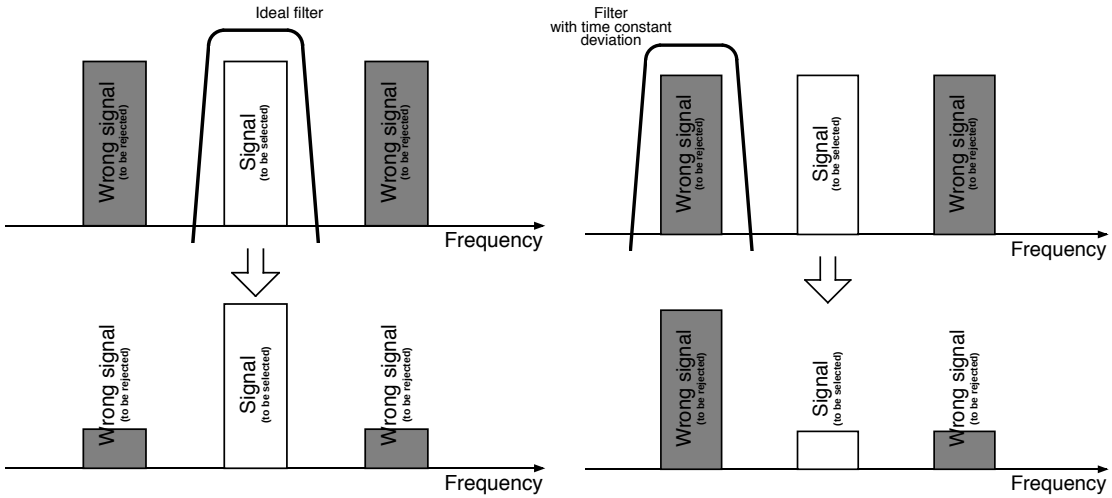

- Frequency response programmability

  Multi-Mode / Multi-standard terminal (WLAN IEEE 802.11 a/b/g & UMTS)
- Low-noise in-band performance
- Low-power consumption (portable devices)

Analog Electronics Filters

Filter specification

- An electronic filters is an interconnection network of electrical components, which operates a modification of the frequency spectrum of an applied electrical signal

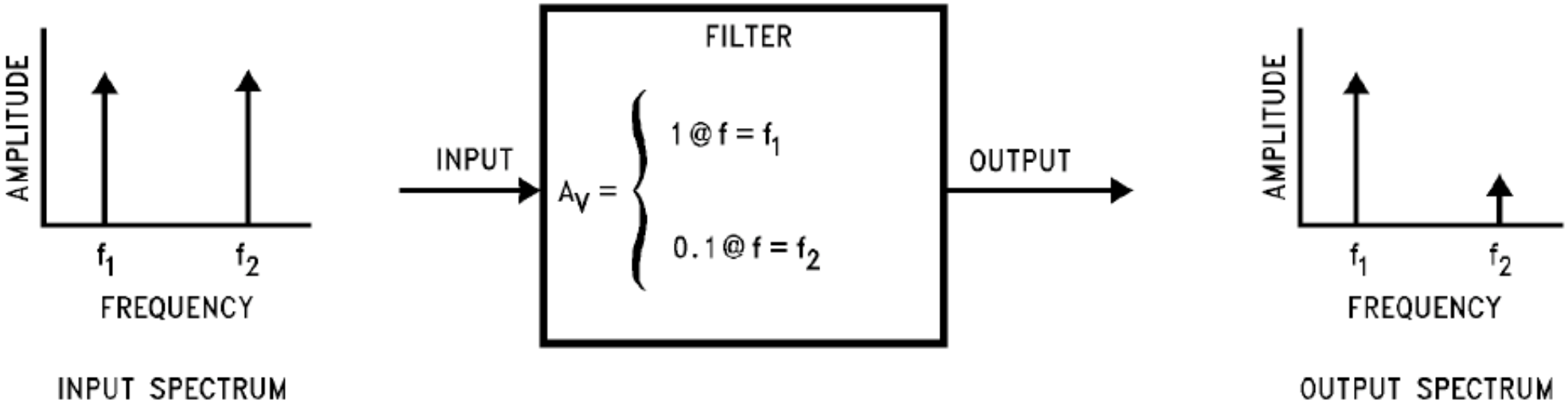

- Different gain (amplitude and/or phase) for different signal frequencies
- The network is linear and time invariant

Filter Design Procedure

- Definition of the Filter specifications
- Design of the network that implements the specifications
- Sizing of the Component values

Filter Design Procedure

Filter specification

- The frequency response is usually defined by a mask, which specifies the range of allowed frequency responses

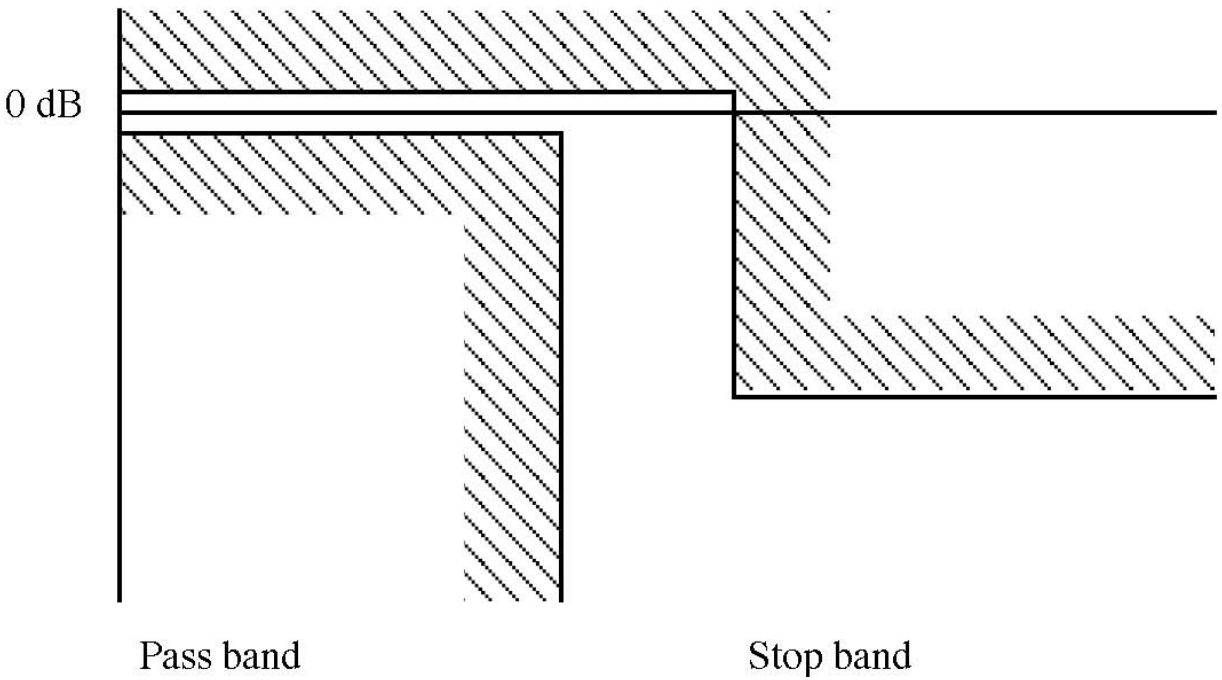

Filter Design Procedure

Filter specification

- The frequency range is divided into:
  - Pass-band
  - Stop-band
- Gain and Phase requirements
  - Gain requirements
    - Ripple in the pass band
    - Attenuation in the stop band
  - Phase requirements
    - Linear phase (constant group delay)

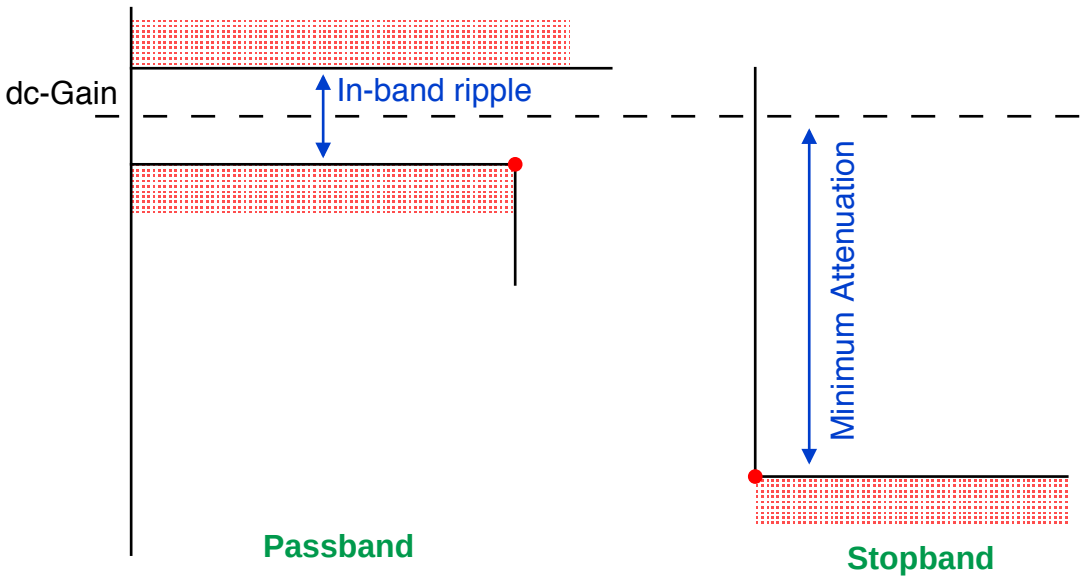

Filter Design Procedure

Filter Frequency Response

- Type of filters:
  - **Lowpass**, lowpass notch
  - Highpass, highpass notch
  - Bandpass, band-reject
  - Allpass (for phase equalizers)

- Filter specifications are met with linear networks with a transfer function of the form:

$$H(s) = \frac{P_m(s)}{Q_n(s)}$$

- $P_m(s)$ and $Q_n(s)$ are polynomial of order m and n respectively

Filter Design Procedure

Filter Frequency Response

$$H(s) = \frac{P_m(s)}{Q_n(s)}$$

- The zeros of $P_m(s)$ are the zeros of the transfer function
- The zeros of $Q_n(s)$ are the poles of the transfer function

- Always $n \geq m$

$$H(s) = \frac{a_0 + a_1 \cdot s + a_2 \cdot s^2 + a_3 \cdot s^3 + a_4 \cdot s^4 + \ldots\ldots\ldots}{b_0 + b_1 \cdot s + b_2 \cdot s^2 + b_3 \cdot s^3 + b_4 \cdot s^4 + \ldots\ldots\ldots}$$

$$H(s) = \frac{(s + t_{z1}) \cdot (s + t_{z2}) \cdot \ldots \cdot (s^2 + s \cdot \omega_{z1} / Q_{z1} + \omega_{z1}^2) \cdot \ldots\ldots\ldots}{(s + t_{p1}) \cdot (s + t_{p2}) \cdot \ldots \cdot (s^2 + s \cdot \omega_{p1} / Q_{p1} + \omega_{p1}^2) \cdot \ldots\ldots\ldots}$$

- The number of poles gives the order of the filter

Analog filters

2nd order frequency response

- Lowpass Frequency Response

$$H(s) = k \cdot \frac{\omega_z^2}{s^2 + \frac{\omega_p}{Q_p} \cdot s + \omega_p^2} = \frac{a_0}{s^2 + b_1 \cdot s + b_0}$$

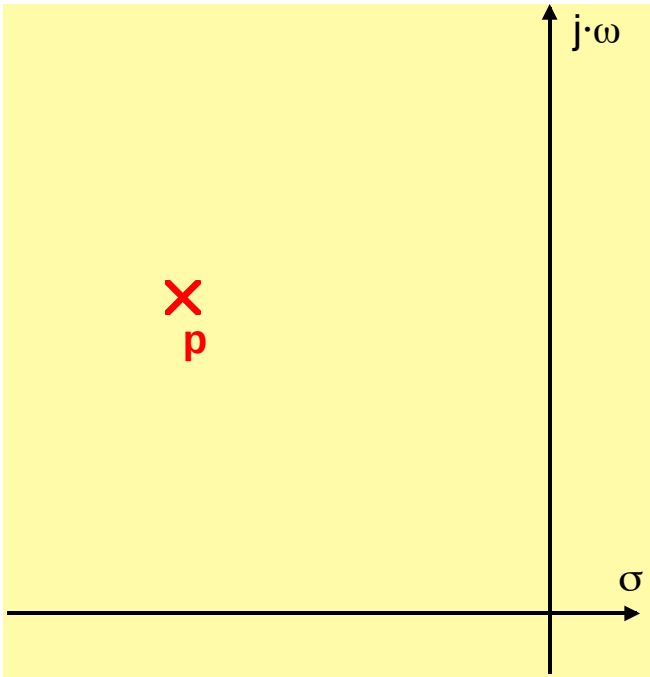

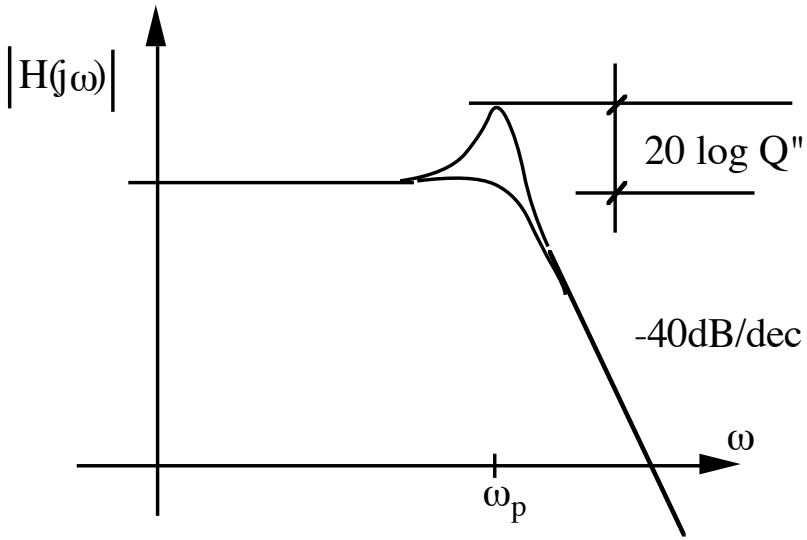

Analog filters

2nd order frequency response

- Bandpass Frequency Response

$$H(s) = k \cdot \frac{\frac{\omega_z}{Q_z} \cdot s}{s^2 + \frac{\omega_p}{Q_p} \cdot s + \omega_p^2} = \frac{a_1 \cdot s}{s^2 + b_1 \cdot s + b_0}$$

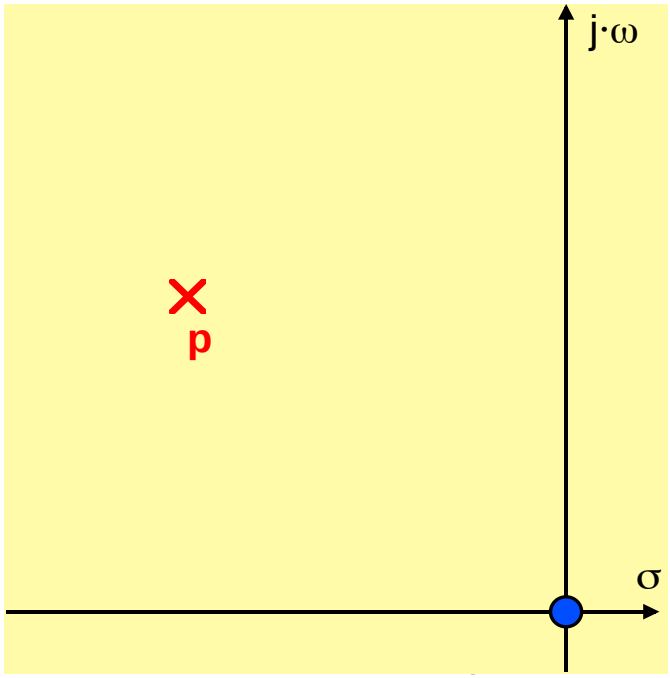

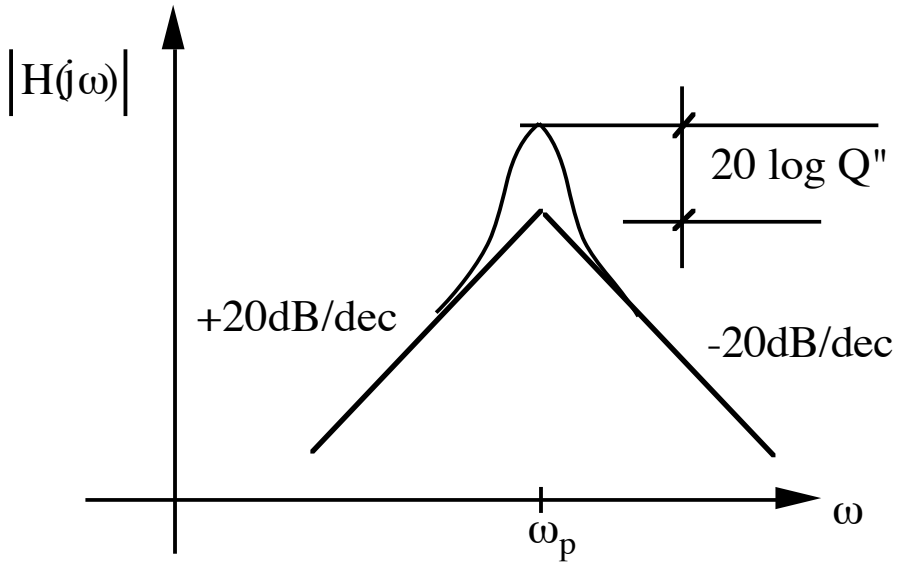

Analog filters

2nd order frequency response

- Highpass Frequency Response

$$H(s) = k \cdot \frac{s^2}{s^2 + \frac{\omega_p}{Q_p} \cdot s + \omega_p^2} = \frac{a_2 \cdot s^2}{s^2 + b_1 \cdot s + b_0}$$

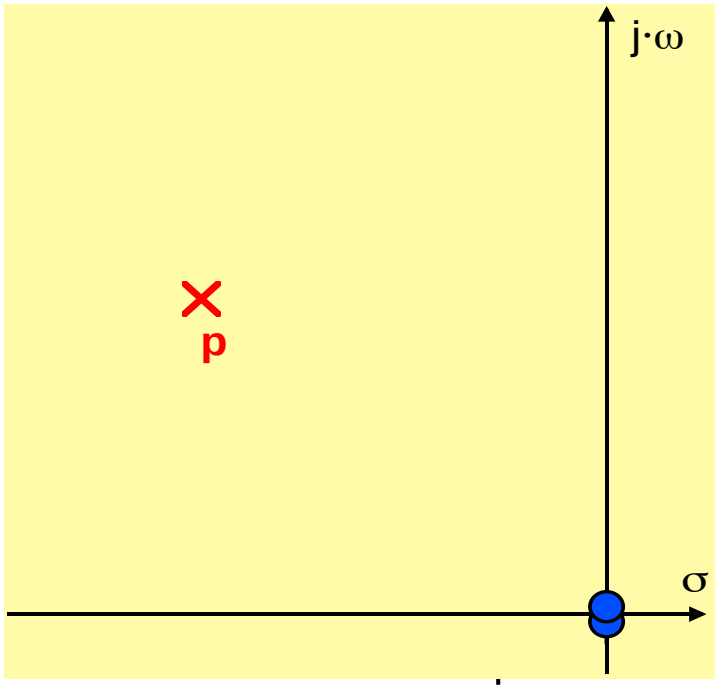

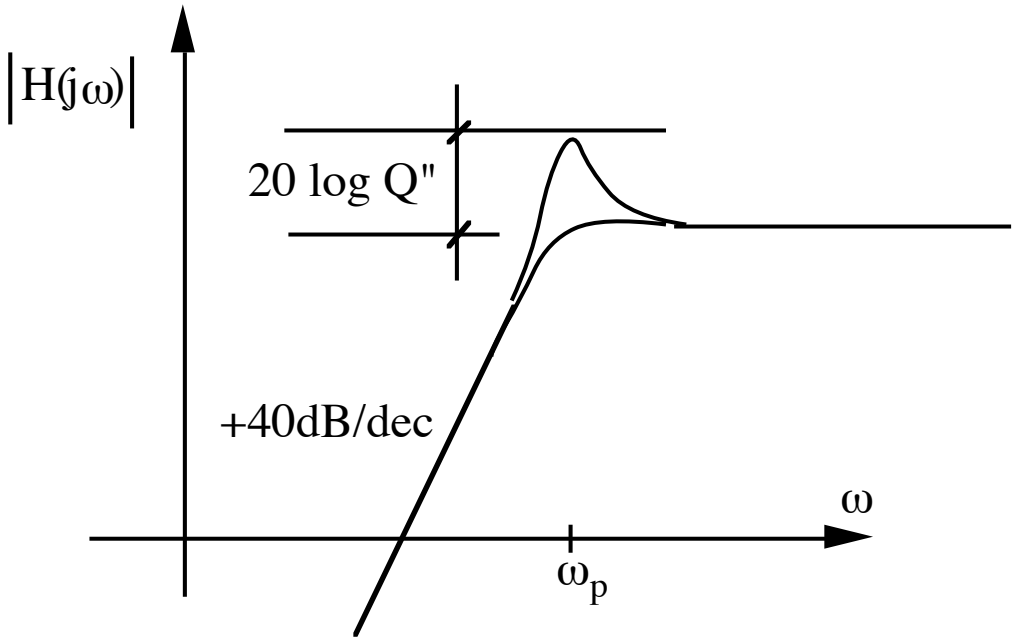

Analog filters

2nd order frequency response

- Notch Frequency Response

$$H(s) = k \cdot \frac{s^2 + \omega_z^2}{s^2 + \frac{\omega_p}{Q_p} \cdot s + \omega_p^2} = \frac{a_2 \cdot s^2 + a_0}{s^2 + b_1 \cdot s + b_0}$$

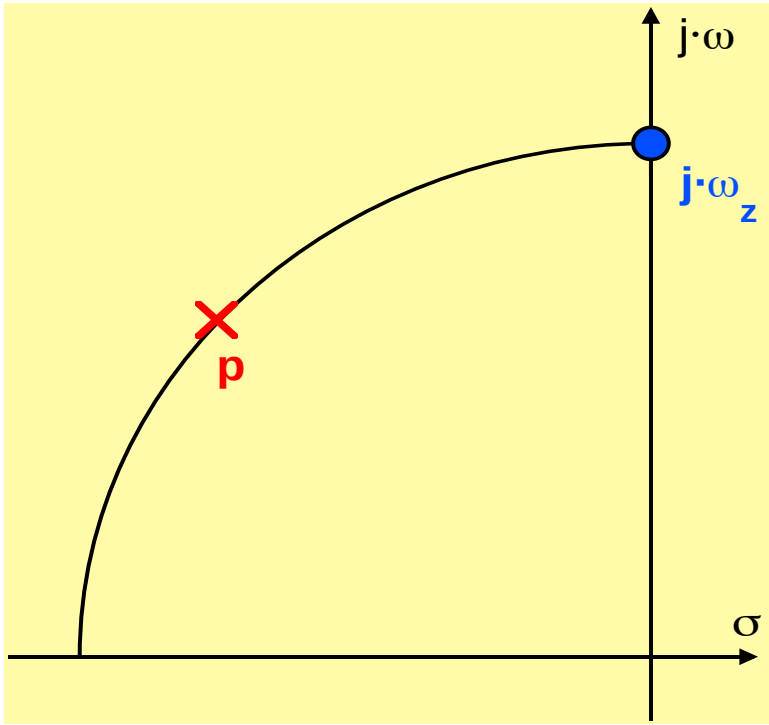

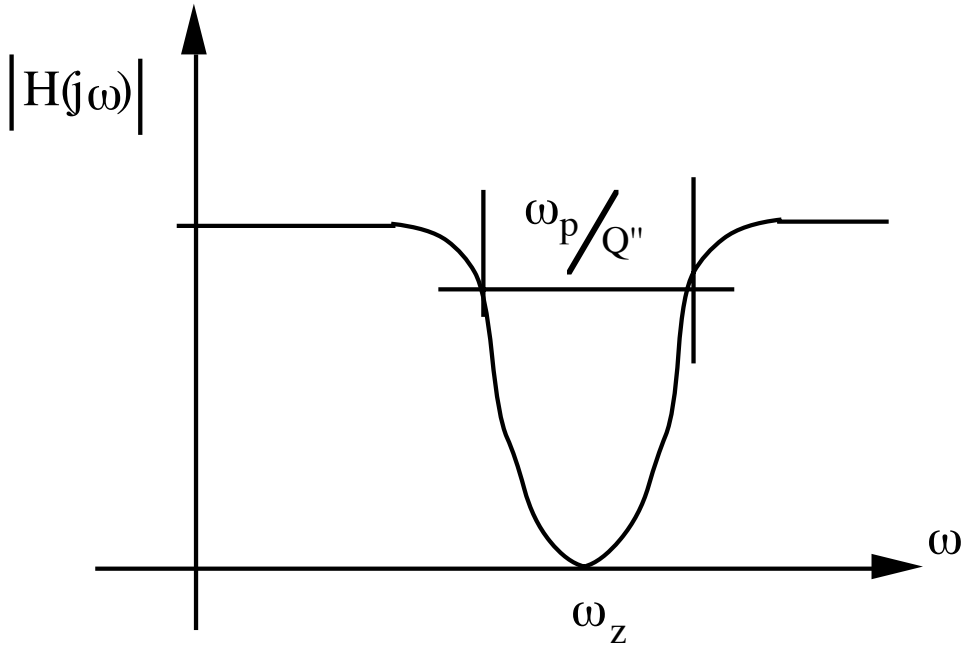

Analog filters

2nd order frequency response

- Frequency response vs. Q

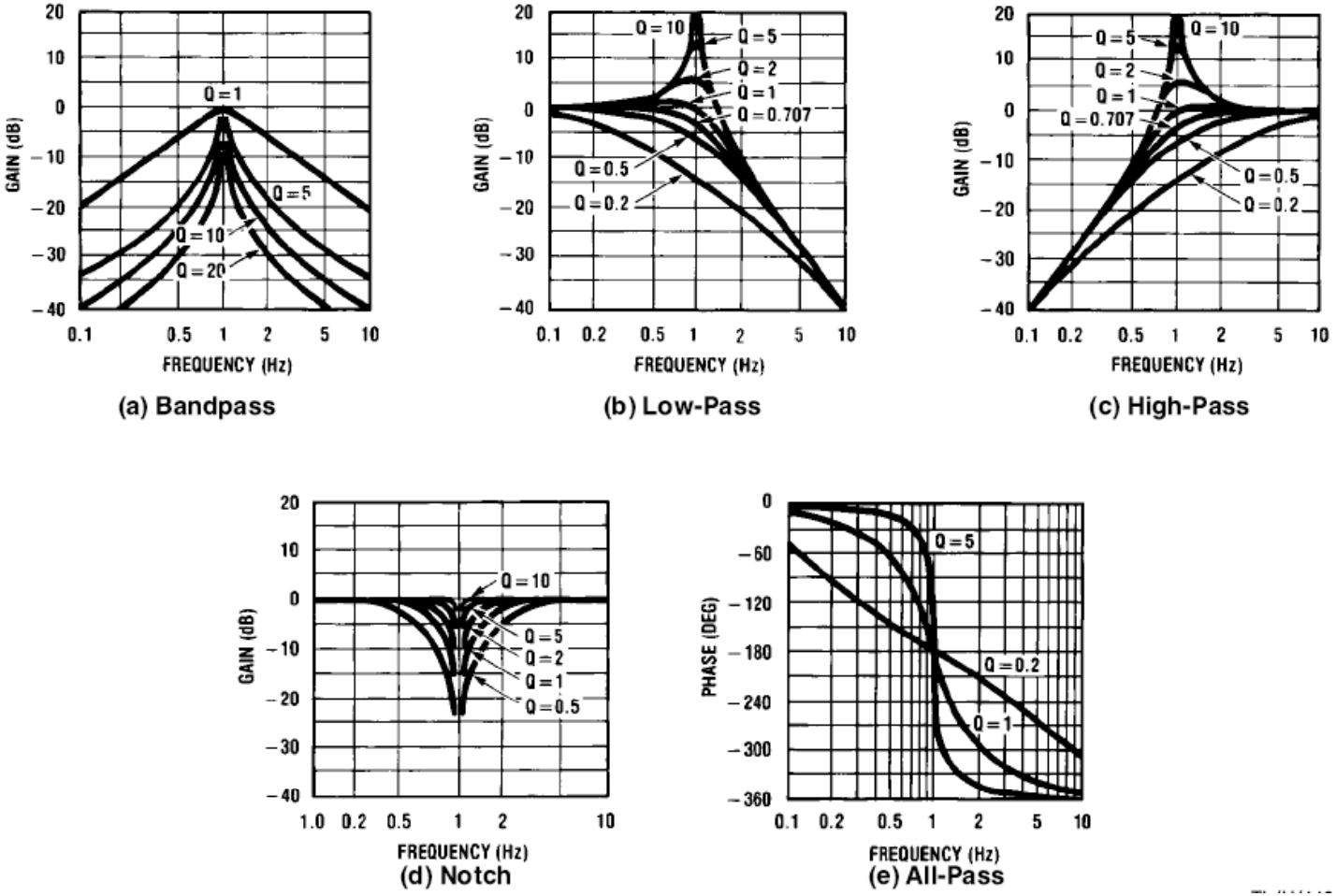

Filter Design Procedure

Filter Frequency Response Approximations

- Lowpass Frequency Response

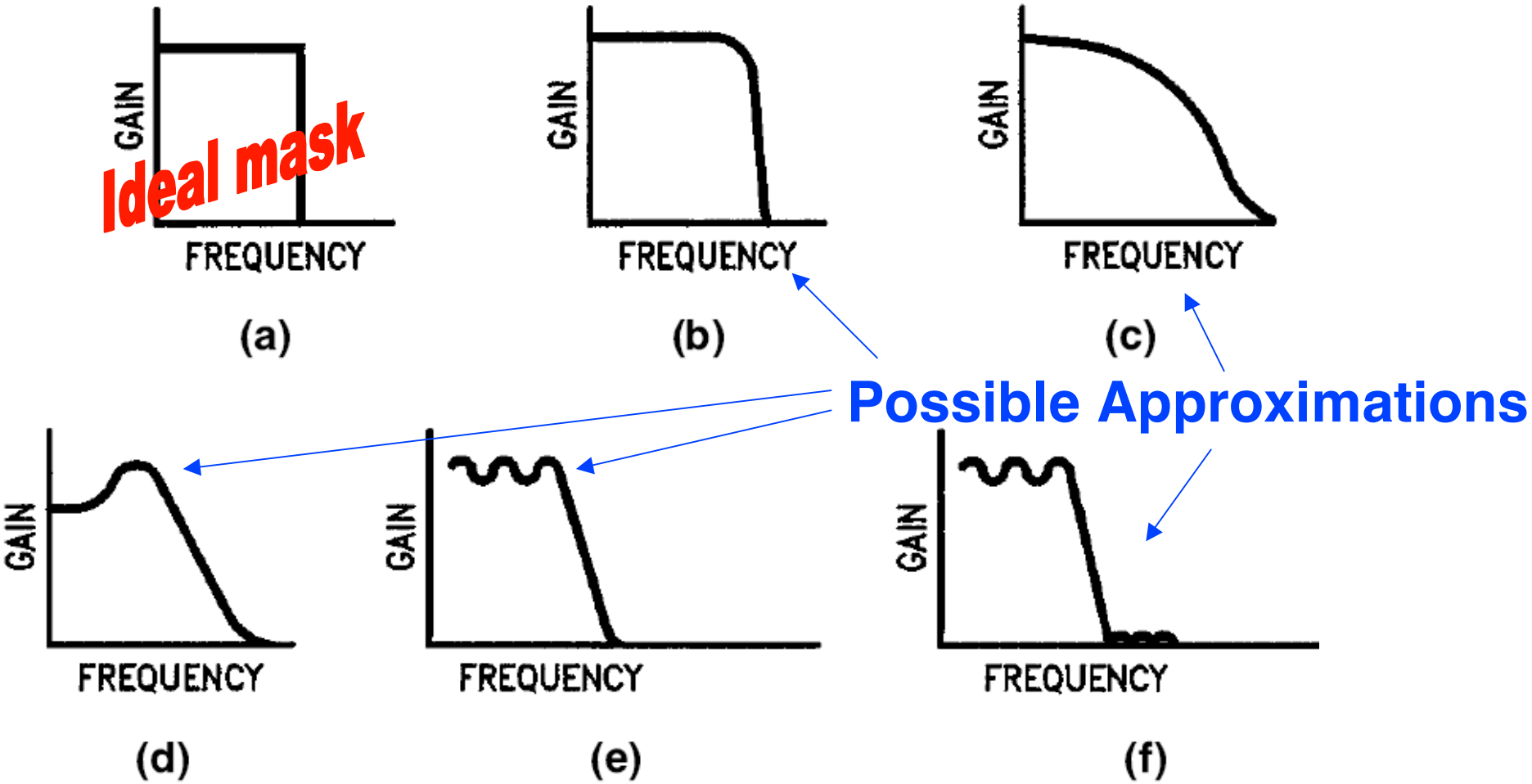

Filter Design Procedure

Filter Frequency Response Approximations

- Lowpass Frequency Response

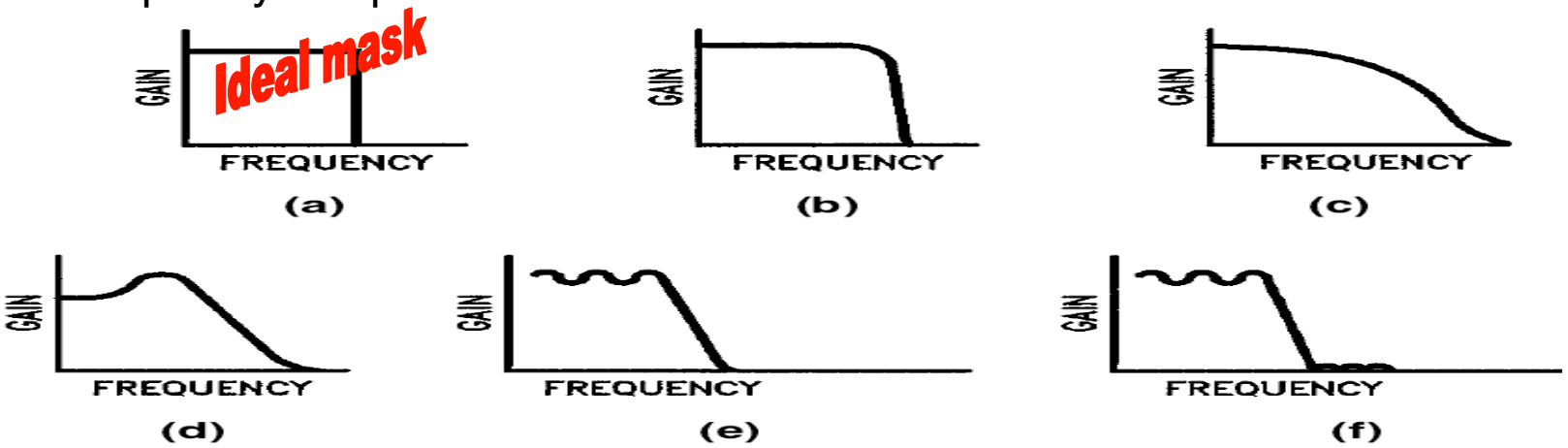

- Any approximation implies trade-off in trems of
  - Circuit complexity
  - Power consumption
  - Performance level
    - linearity
    - noise
    - selectivity

Filter Design Procedure

Filter Frequency Response Approximations

- Bandpass Frequency Response

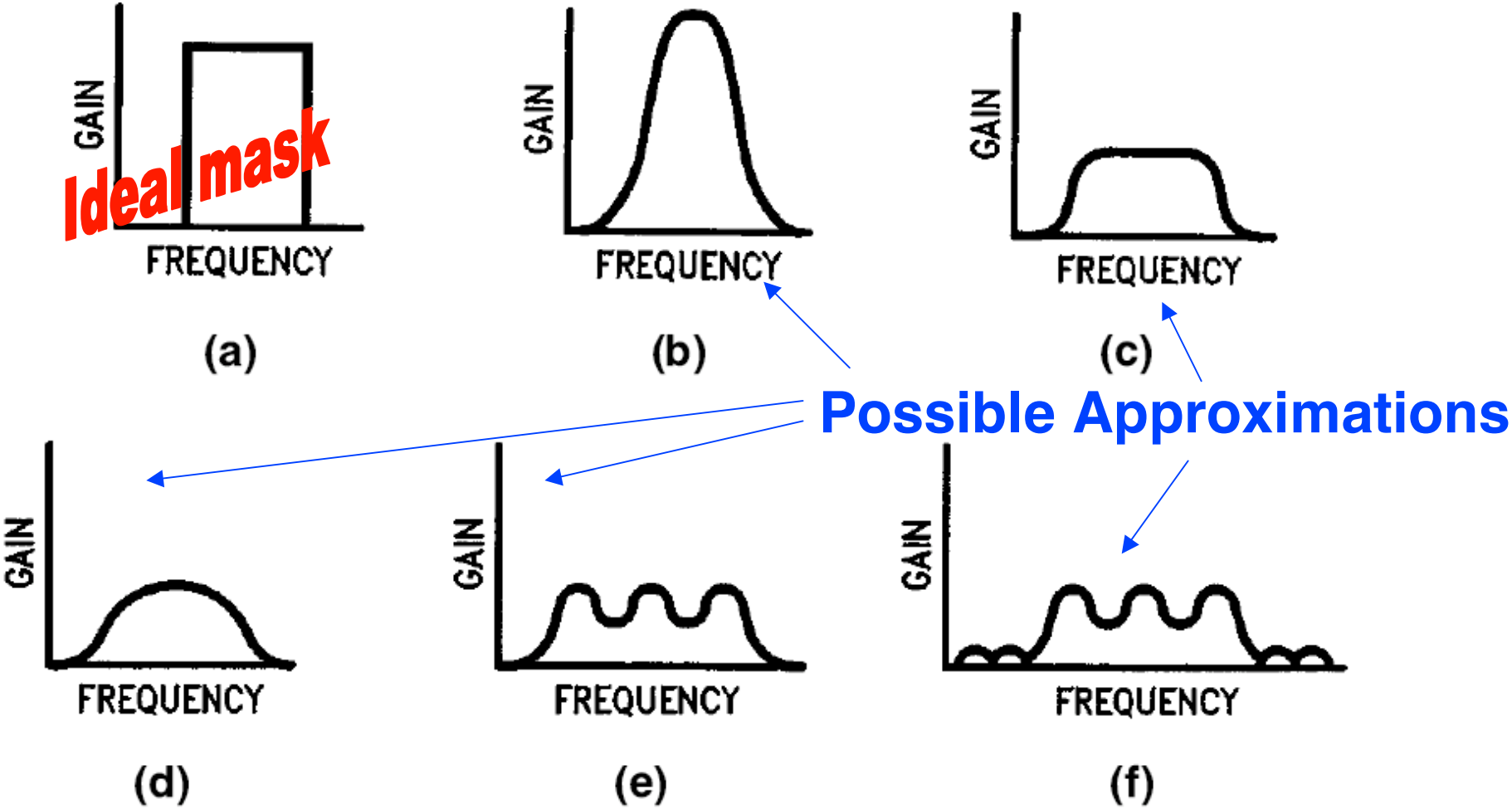

Filter Design Procedure

Filter Frequency Response Approximations

- Notch Frequency Response

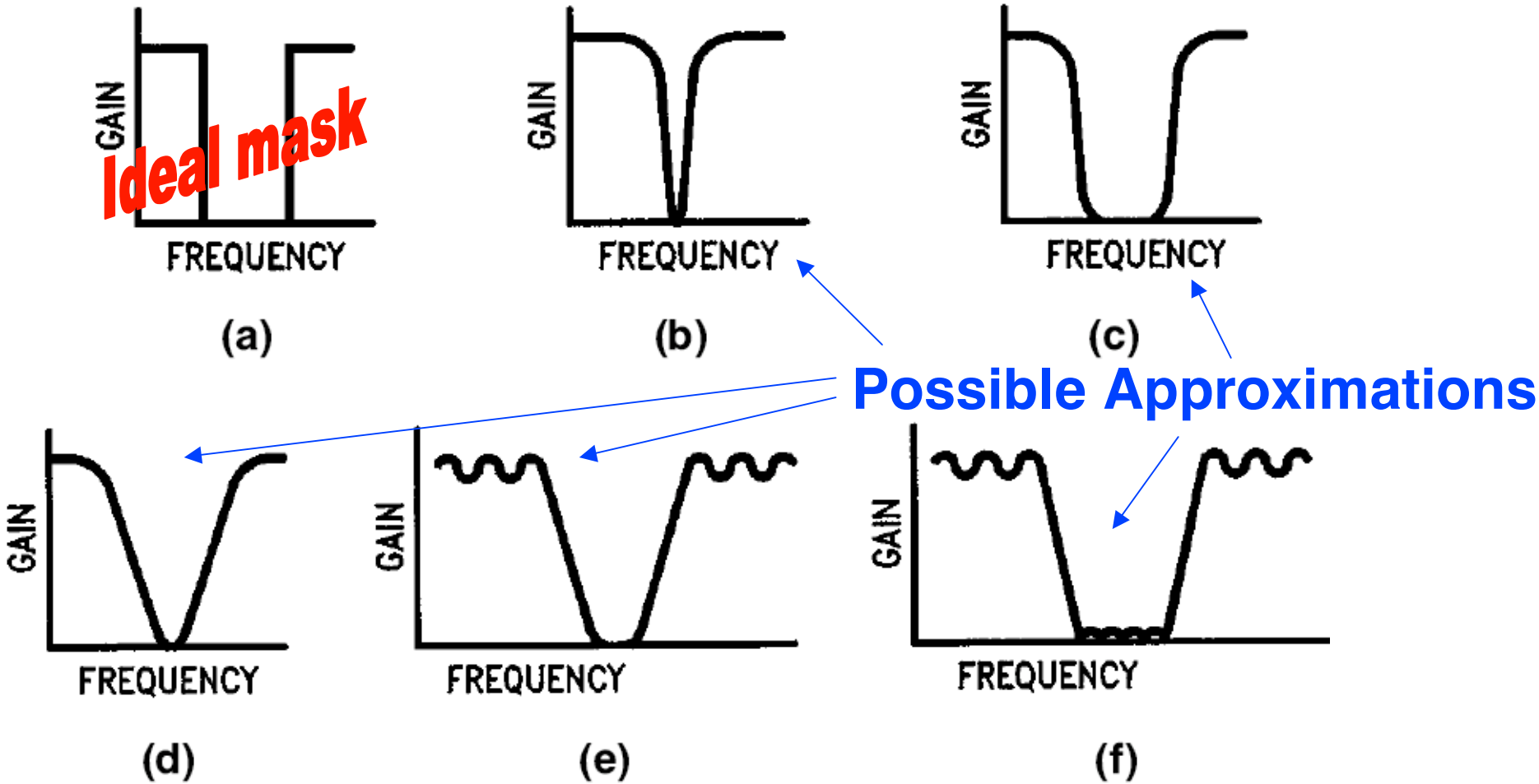

Filter Design Procedure

Filter Frequency Response Approximations

- Highpass Frequency Response

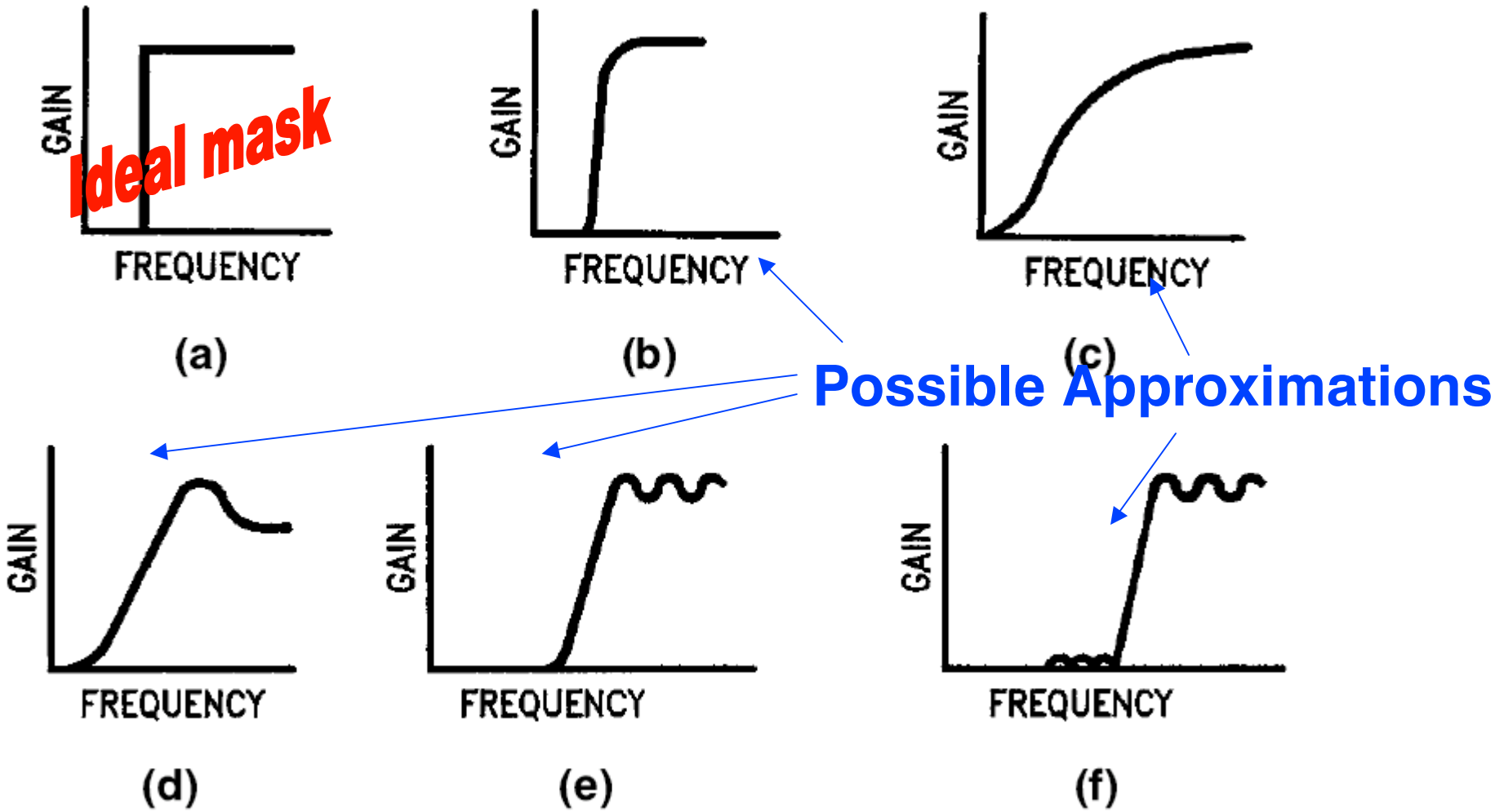

Frequency Response Description

- Ideal lowpass Frequency Response

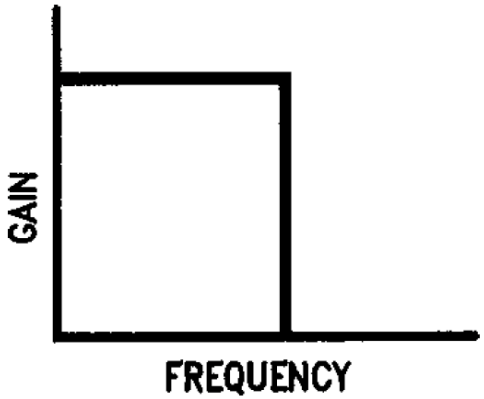

- Amplitude Response Limits for a Practical Low-Pass Filter

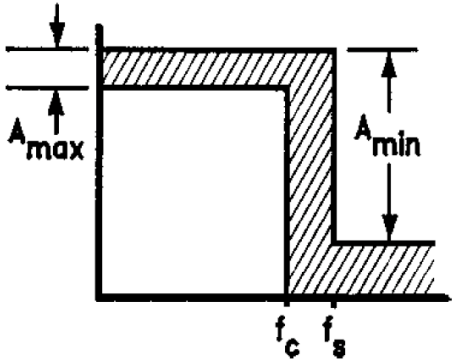

- Example of an Amplitude Response Curve Falling (set by f_c, f_s, A_{min}, and A_{max})

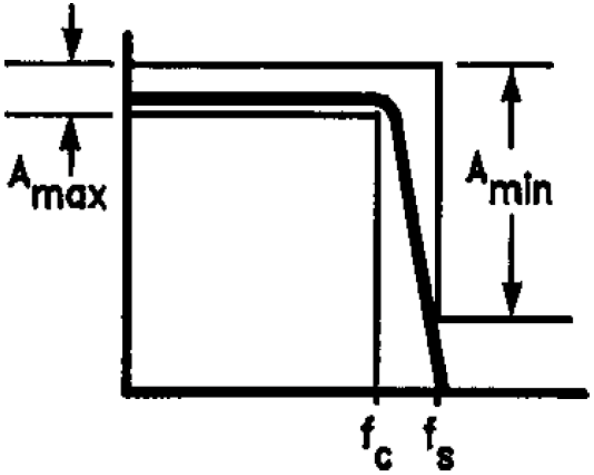

- Another Amplitude Response Falling within the Desired Limits

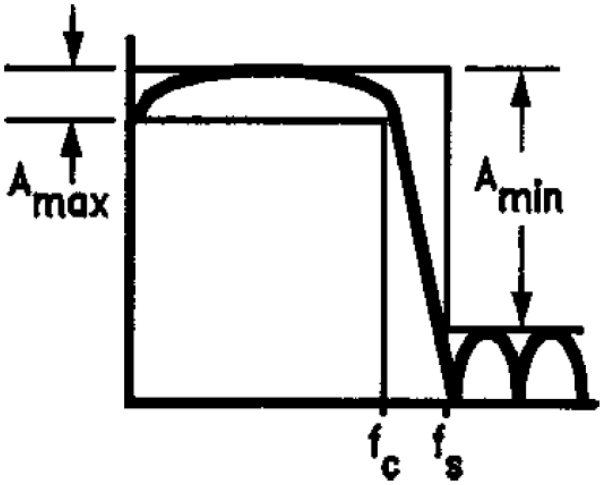

Frequency Response Approximations

- Ideal lowpass frequency response

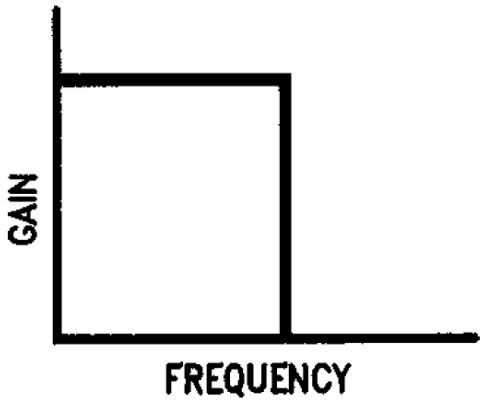

- Amplitude Response Limits for a Practical Low-Pass Filter

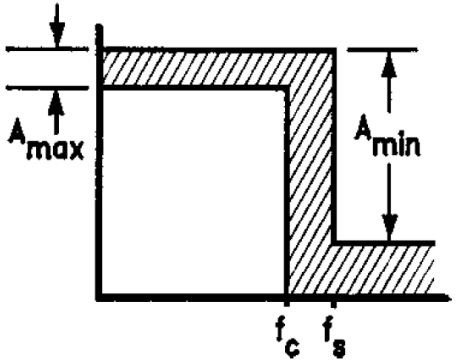

- Possible (most popular) approximations:

  Butterworth (or Maximally Flat) Approximation

  Chebyshev (or Equiripple) Approximation

  Bessel (linear phase)

  Elliptic (with transmission zeros)

Frequency Response Approximations

The Butterworth approximation

- The general equation for a Butterworth filter's amplitude response is:

$$H(\omega) = \frac{1}{1 + \left(\frac{\omega}{\omega_o}\right)^{2n}}$$

  - n is the order of the filter, and can be any positive whole number (1, 2, 3,...)
  - ω_o is the -3dB frequency of the filter

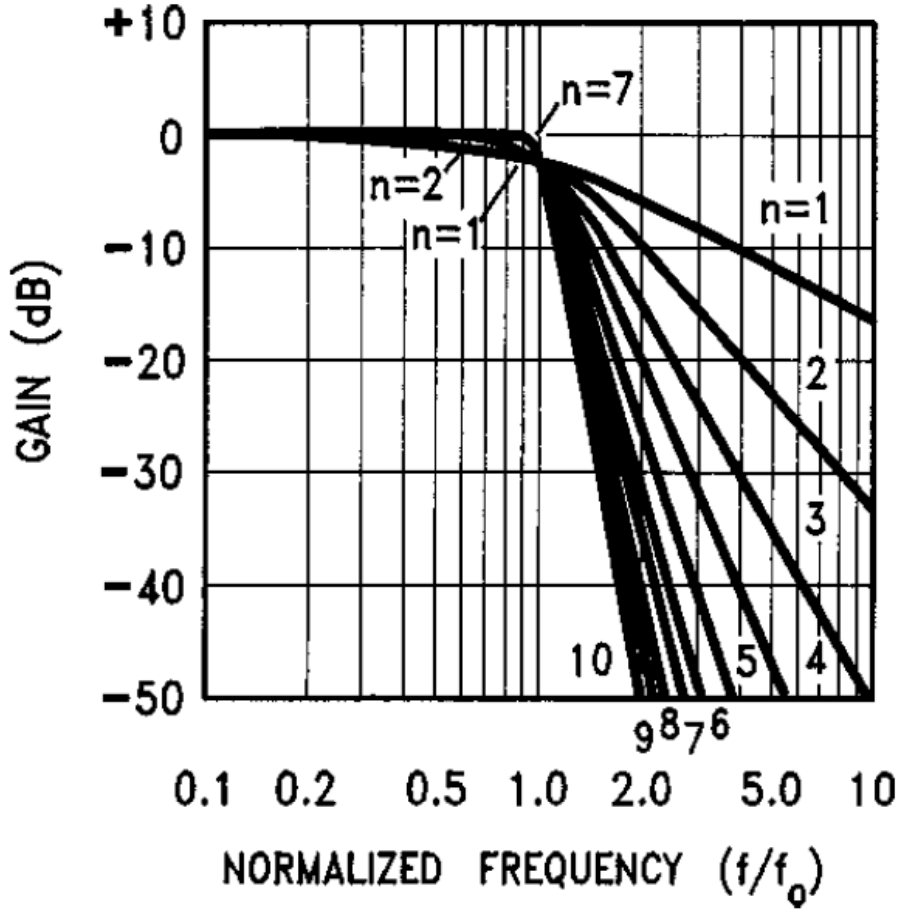

Frequency Response Approximations

The Butterworth approximation

$$H(\omega) = \frac{1}{1 + \left(\frac{\omega}{\omega_o}\right)^{2n}}$$

- Amplitude response curves for Butterworth filters of various filter orders

- The Butterworth (or maximally-flat response) exhibits a nearly flat passband with no ripple

- The rolloff is smooth and monotonic, with a low-pass or high-pass rolloff rate of 20 dB/decade (6 dB/octave) for every pole

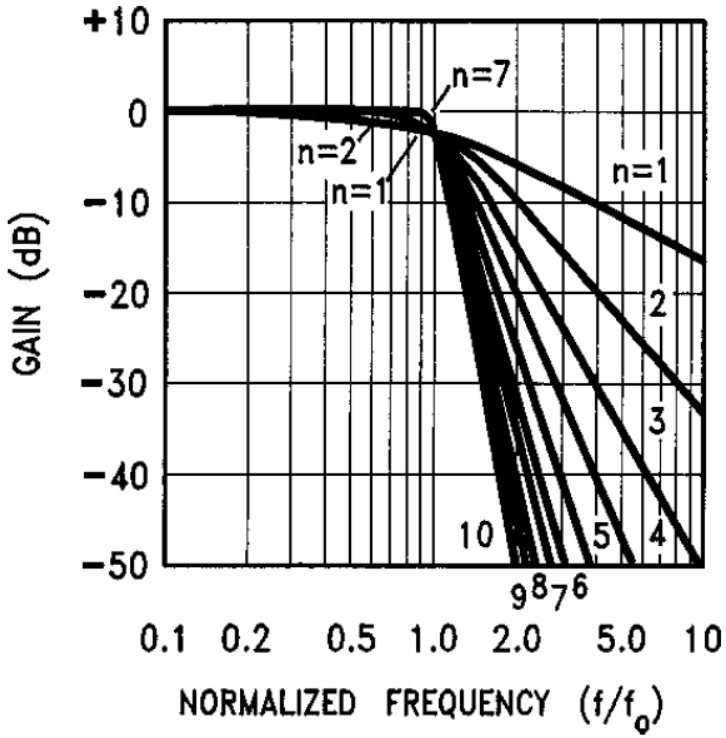

Frequency Response Approximations

The Butterworth Approximation

In-band Amplitude Freq Response

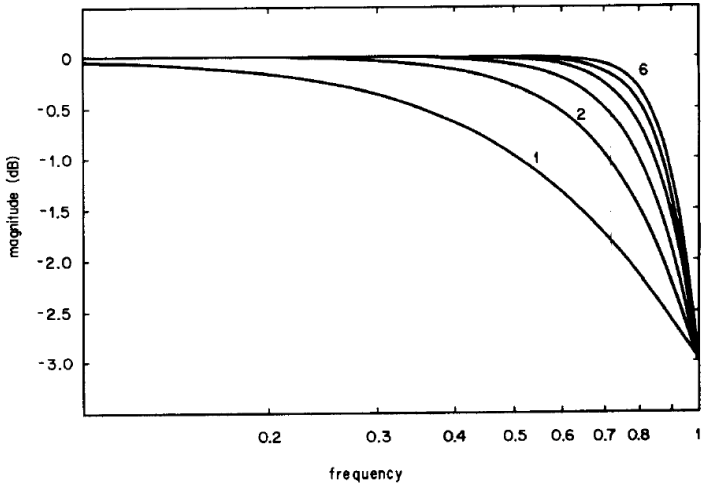

Out-of-band Amplitude Freq Response

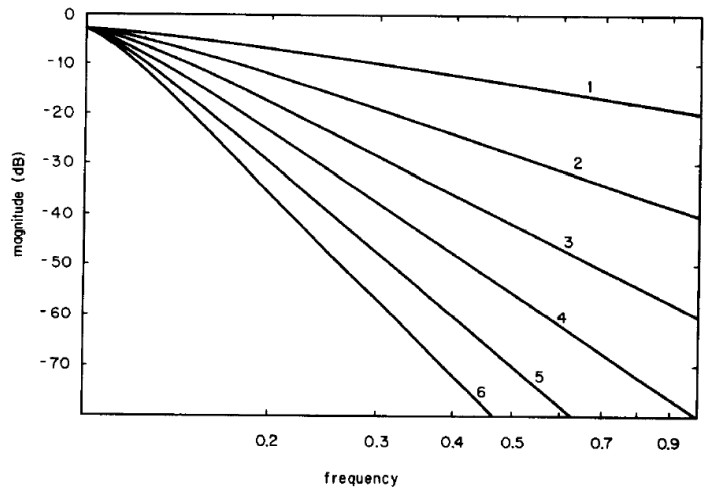

In-band Amplitude Phase Response

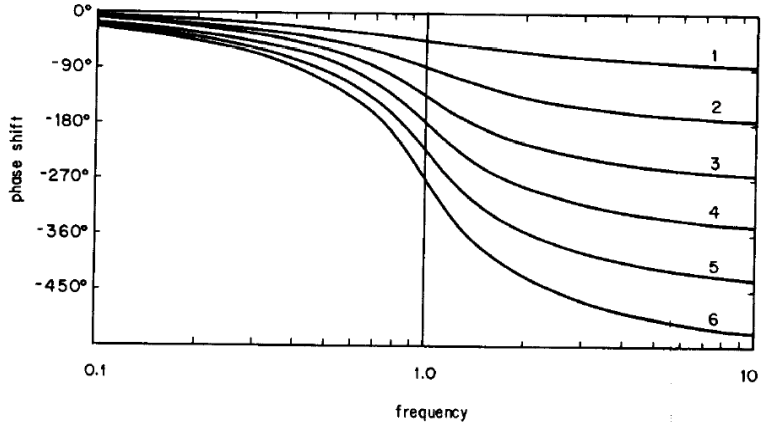

Frequency Response Approximations

The Butterworth approximation

Pole positions

TABLE 3.1 Poles of Lowpass Butterworth Filters

n	Pole values
2	$-0.707107 \pm 0.707107j$
3	-1.0
	$-0.5 \pm 0.866025j$
4	$-0.382683 \pm 0.923880j$
	$-0.923880 \pm 0.382683j$
5	-1.0
	$-0.809017 \pm 0.587785j$
	$-0.309017 \pm 0.951057j$
6	$-0.258819 \pm 0.965926j$
	$-0.707107 \pm 0.707107j$
	$-0.965926 \pm 0.258819j$
7	-1.0
	$-0.900969 \pm 0.433884j$
	$-0.623490 \pm 0.781831j$
	$-0.222521 \pm 0.974928j$
8	$-0.195090 \pm 0.980785j$
	$-0.555570 \pm 0.831470j$
	$-0.831470 \pm 0.555570j$
	$-0.980785 \pm 0.195090j$

Polynomial coefficients

TABLE 1(a). Butterworth Polynomials

Denominator coefficients for polynomials of the form $s^n + a_{n-1}s^{n-1} + a_{n-2}s^{n-2} + \ldots + a_1 s + a_0$.

n	a_0	a_1	a_2	a_3	a_4	a_5	a_6	a_7	a_8	a_9
1	1									
2	1	1.414								
3	1	2.000	2.000							
4	1	2.613	3.414	2.613						
5	1	3.236	5.236	5.236	3.236					
6	1	3.864	7.464	9.142	7.464	3.864				
7	1	4.494	10.098	14.592	14.592	10.098	4.494			
8	1	5.126	13.137	21.846	25.688	21.846	13.137	5.126		
9	1	5.759	16.582	31.163	41.986	41.986	31.163	16.582	5.759	
10	1	6.392	20.432	42.802	64.882	74.233	64.882	42.802	20.432	6.392

TABLE 1(b). Butterworth Quadratic Factors

n	
1	$(s + 1)$
2	$(s^2 + 1.4142s + 1)$
3	$(s + 1)(s^2 + s + 1)$
4	$(s^2 + 0.7654s + 1)(s^2 + 1.8478s + 1)$
5	$(s + 1)(s^2 + 0.6180s + 1)(s^2 + 1.6180s + 1)$
6	$(s^2 + 0.5176s + 1)(s^2 + 1.4142s + 1)(s^2 + 1.9319)$
7	$(s + 1)(s^2 + 0.4450s + 1)(s^2 + 1.2470s + 1)(s^2 + 1.8019s + 1)$
8	$(s^2 + 0.3902s + 1)(s^2 + 1.1111s + 1)(s^2 + 1.6629s + 1)(s^2 + 1.9616s + 1)$
9	$(s + 1)(s^2 + 0.3473s + 1)(s^2 + 1.0000s + 1)(s^2 + 1.5321s + 1)(s^2 + 1.8794s + 1)$
10	$(s^2 + 0.3129s + 1)(s^2 + 0.9080s + 1)(s^2 + 1.4142s + 1)(s^2 + 1.7820s + 1)(s^2 + 1.9754s + 1)$

- All the Tables&Plots are for a unitary cut-off frequency (ω_o=1rad/sec)

Frequency response approximations

The Butterworth approximation – Filter order choice

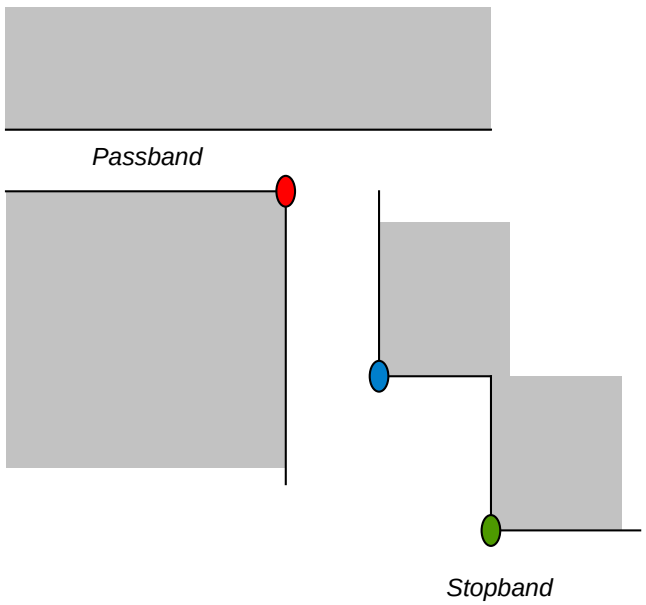

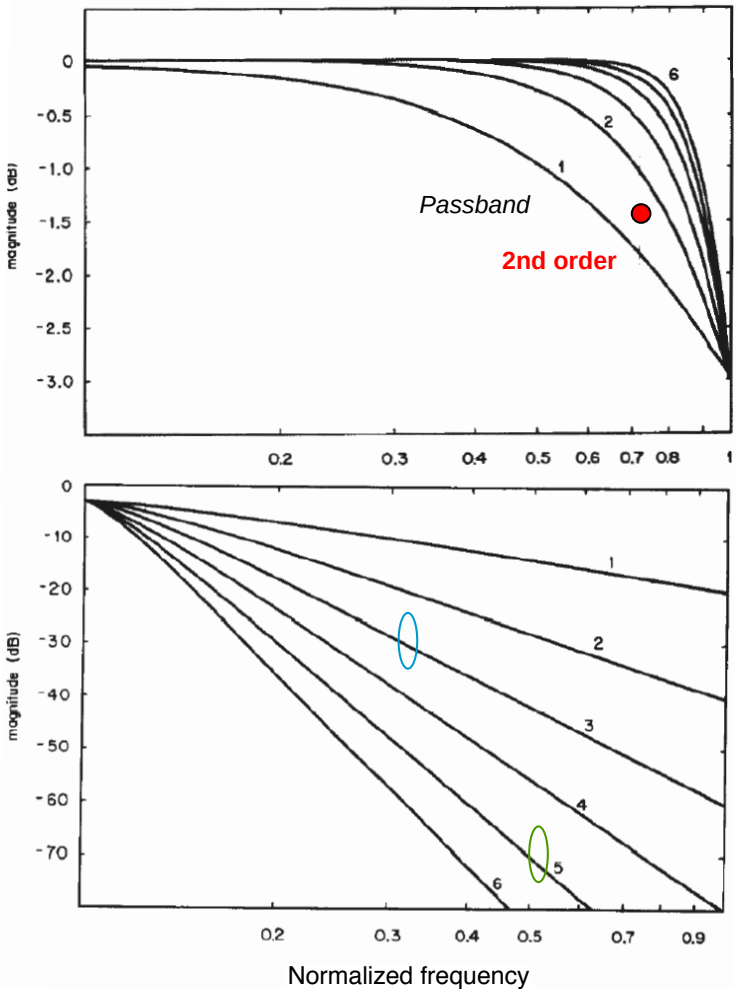

- The most stringent specification fixes the filter order

Frequency response approximations

The Butterworth approximation

- Step responses for Butterworth low-pass filters
- In each case ω_o=1 and a unitary step amplitude is applied
- The step response is important when the filter is required to process a digital input signal, i.e. a bitstream

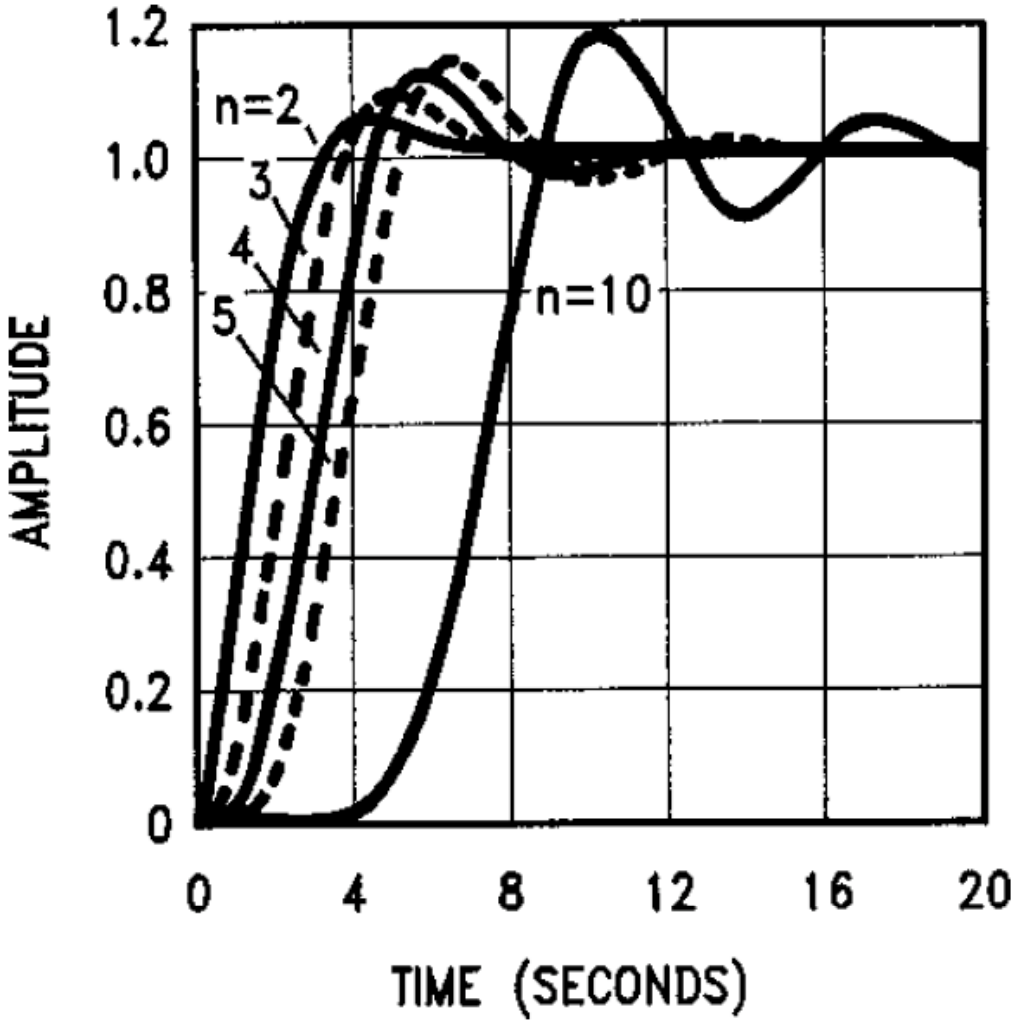

Frequency response approximations

The Chebyshev (or Equiripple) Approximation

- In the passband the ripple is fixed by the design
- The number of the flat point in the in-band frequency response corresponds to thefilter order

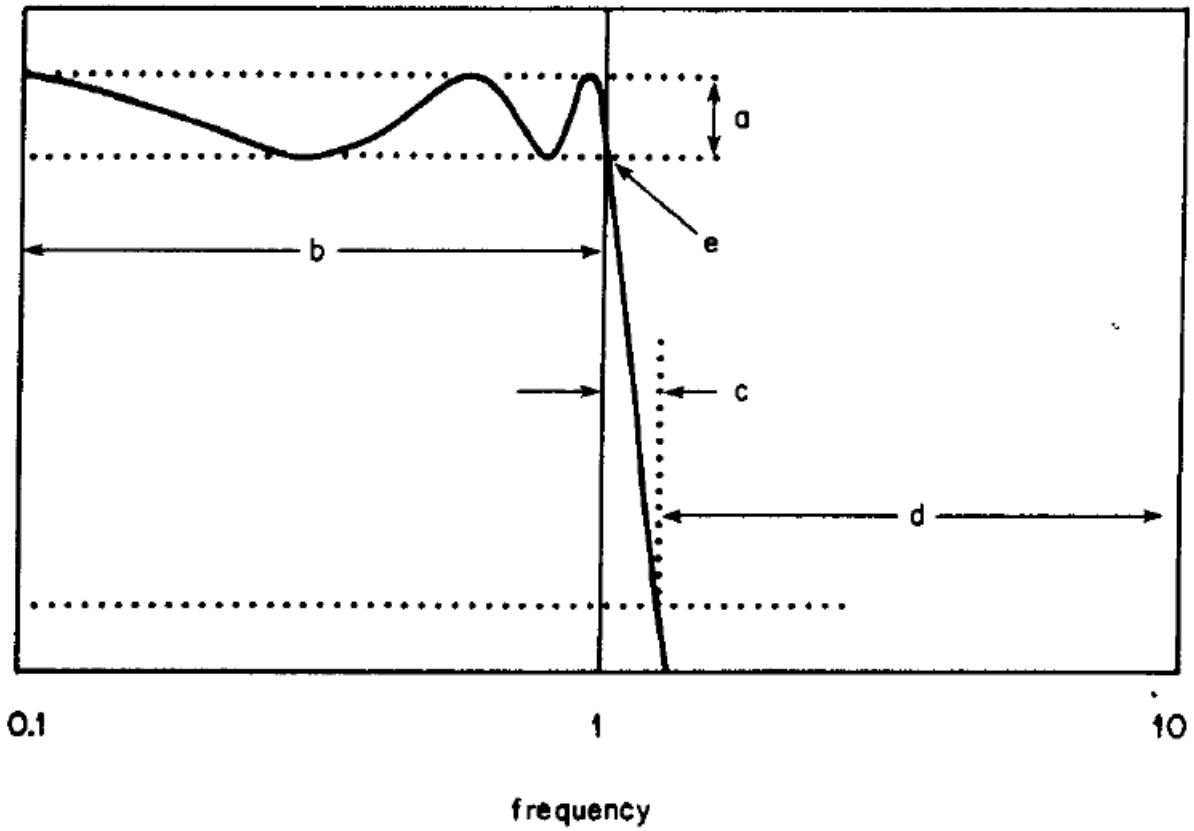

Figure 4.2 Chebyshev response normalized to have pass-band end at $\omega = 1$ rad/s. Features are: (*a*) ripple limits, (*b*) pass band, (*c*) transition band, (*d*) stop band, and (*e*) intersection of response and lower ripple limit at $\omega = 1$.

Frequency response approximations

The Chebyshev (or Equiripple) Approximation

- Different ripple values corresponds to different pole positions

TABLE 4.2 Pole Values for Lowpass Chebyshev Filters with 0.1-dB Pass-Band Ripple

n	Pole values
2	$-1.186178 \pm 1.380948j$
3	-0.969406
	$-0.484703 \pm 1.206155j$
4	$-0.637730 \pm 0.465000j$
	$-0.264156 \pm 1.122610j$
5	-0.538914
	$-0.435991 \pm 0.667707j$
	$-0.166534 \pm 1.080372j$
6	$-0.428041 \pm 0.283093j$
	$-0.313348 \pm 0.773426j$
	$-0.114693 \pm 1.056519j$
7	-0.376778
	$-0.339465 \pm 0.463659j$
	$-0.234917 \pm 0.835485j$
	$-0.083841 \pm 1.041833j$
8	$-0.321650 \pm 0.205314j$
	$-0.272682 \pm 0.584684j$
	$-0.182200 \pm 0.875041j$
	$-0.063980 \pm 1.032181j$

TABLE 4.3 Pole Values for Lowpass Chebyshev Filters with 0.5-dB Pass-Band Ripple

n	Pole values
2	$-0.712812 \pm 1.00402j$
3	-0.626457
	$-0.313228 \pm 1.021928j$
4	$-0.423340 \pm 0.420946j$
	$-0.175353 \pm 1.016253j$
5	-0.362320
	$-0.293123 \pm 0.625177j$
	$-0.111963 \pm 1.011557j$
6	$-0.289794 \pm 0.270216j$
	$-0.212144 \pm 0.738245j$
	$-0.077650 \pm 1.008461j$
7	-0.256170
	$-0.230801 \pm 0.447894j$
	$-0.159719 \pm 0.807077j$
	$-0.057003 \pm 1.006409j$
8	$-0.219293 \pm 0.199907j$
	$-0.185908 \pm 0.569288j$
	$-0.124219 \pm 0.852000j$
	$-0.043620 \pm 1.005002j$

Frequency response approximations

The Chebyshev Approximation: Even / Odd order Frequency Response

- Even order filter frequency response

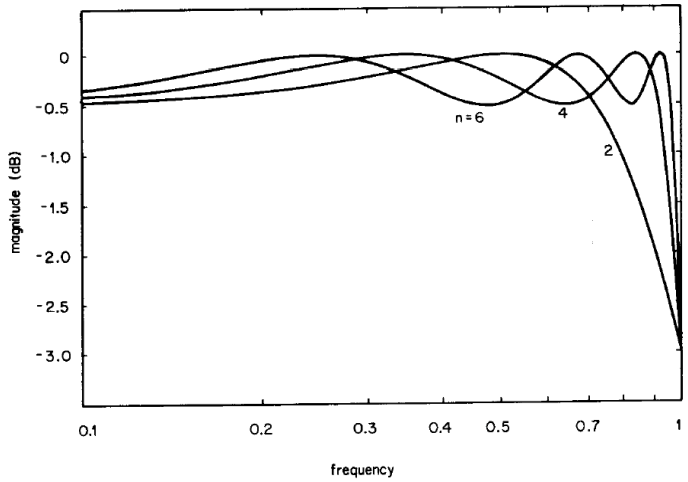

Figure 4.5 Pass-band magnitude response of even-order lowpass Chebyshev filters with 0.5-dB ripple.

- Odd order filter frequency response

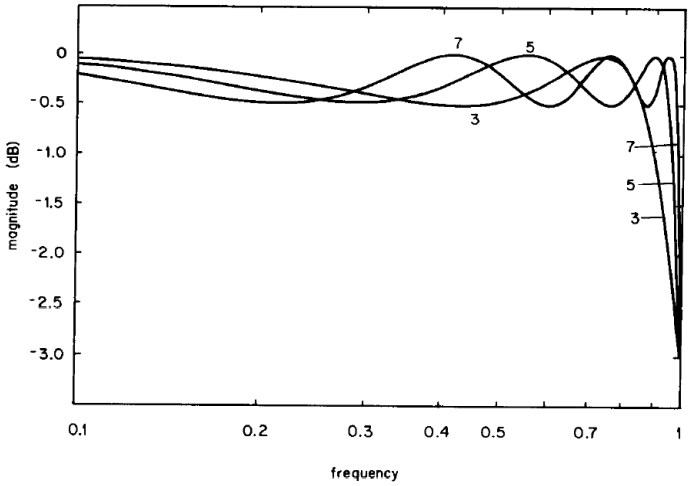

Figure 4.6 Pass-band magnitude response of odd-order lowpass Chebyshev filters with 0.5-dB ripple.

Frequency response approximations

The Chebyshev Approximation: Out-of-Band Frequency Response

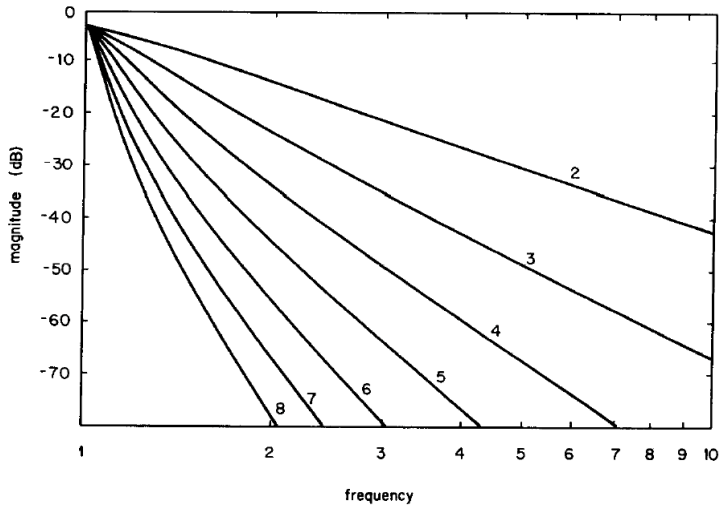

Figure 4.7 Stop-band magnitude response of lowpass Chebyshev filters with 0.5-dB ripple.

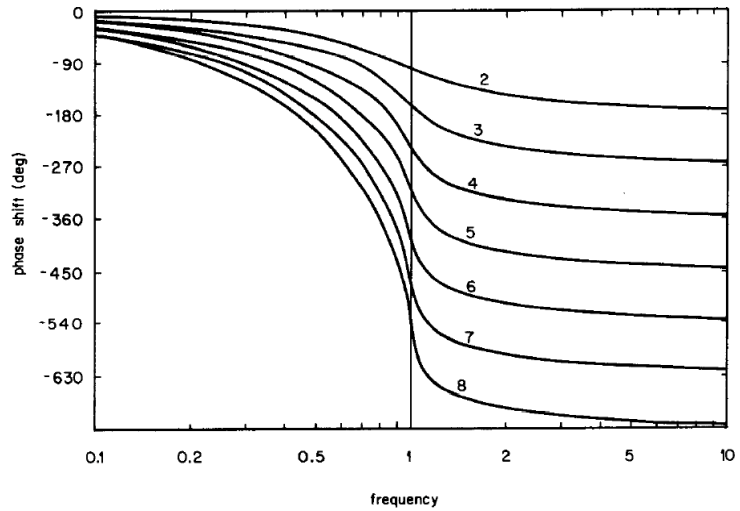

Figure 4.8 Phase response of lowpass Chebyshev filters with 0.5-dB pass-band ripple.

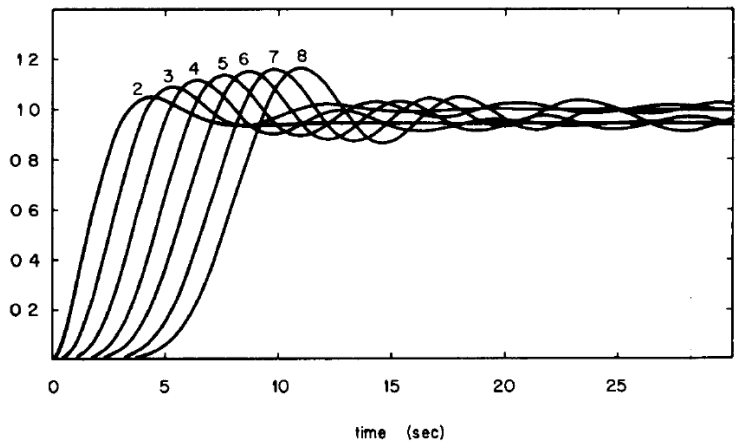

Figure 4.12 Step response of lowpass Chebyshev filters with 0.5-dB pass-band ripple.

Frequency response approximations

The Bessel approximation

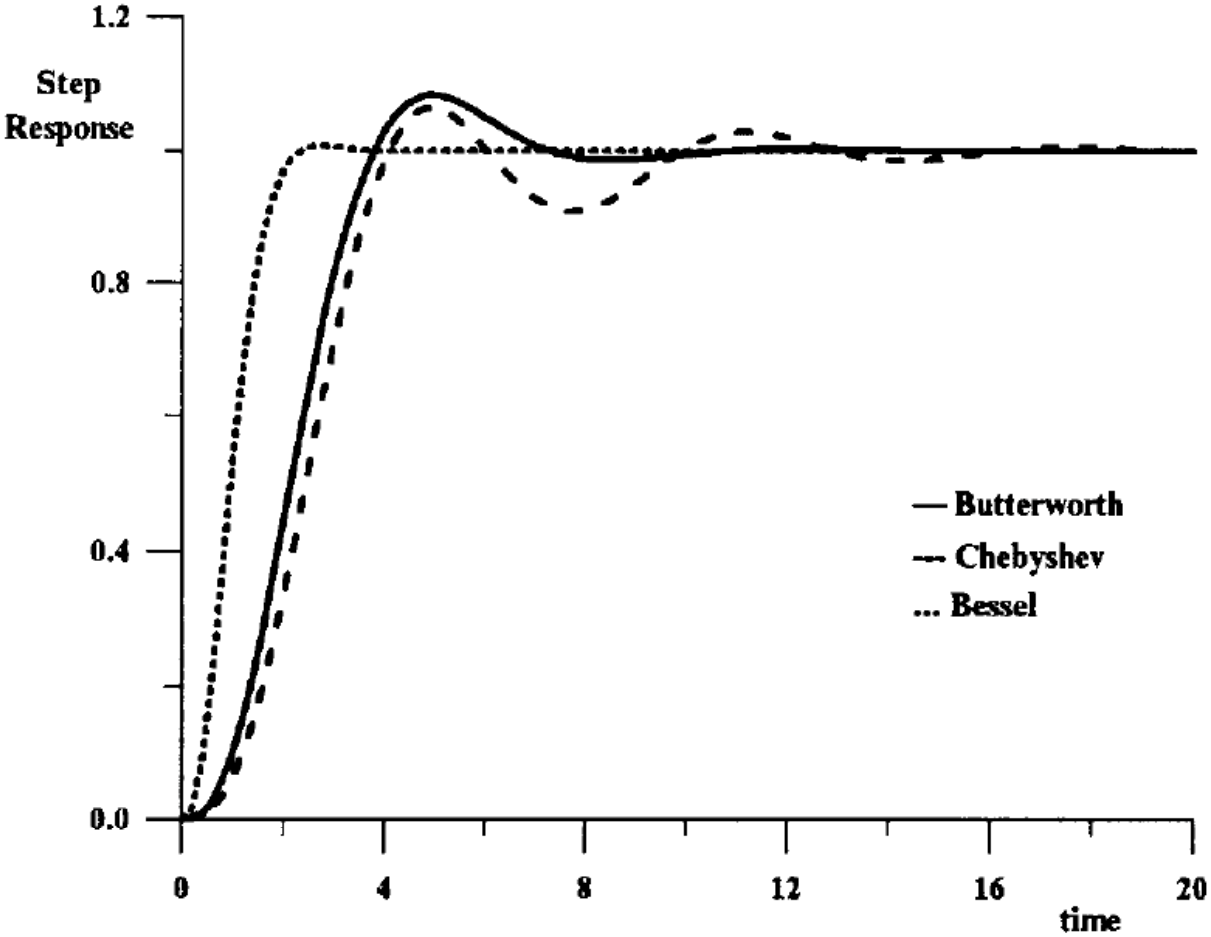

- Optimum for step response

Frequency response approximations

The Bessel approximation

4th-order Butterworth lowpass filter

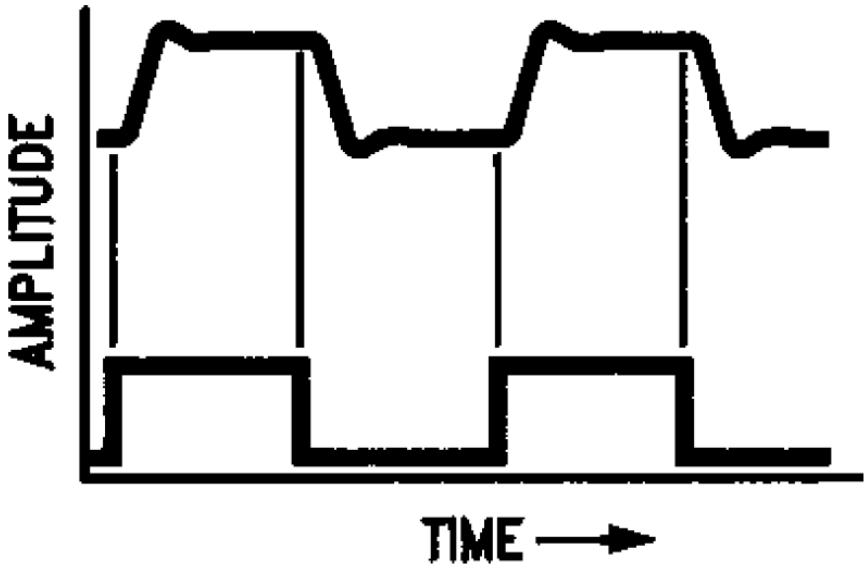

- The ``ringing'' in the response shows that the nonlinear phase shift distorts the filtered wave shape

4th-order Bessel low-pass filter

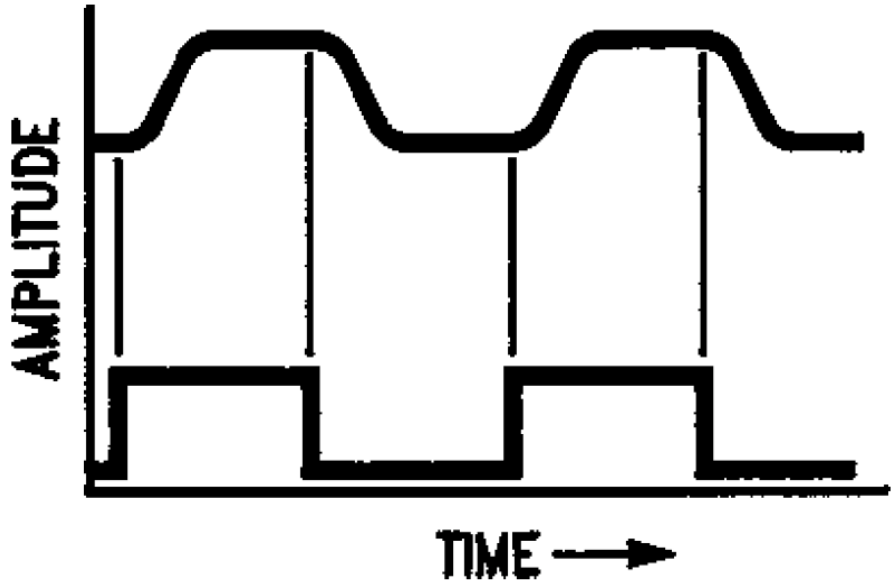

- No ringing in the response.
- Rounding of the corners due to the reduction of high frequency components
- The response is a relatively undistorted version of the input square wave

Frequency response approximations

The Bessel approximation

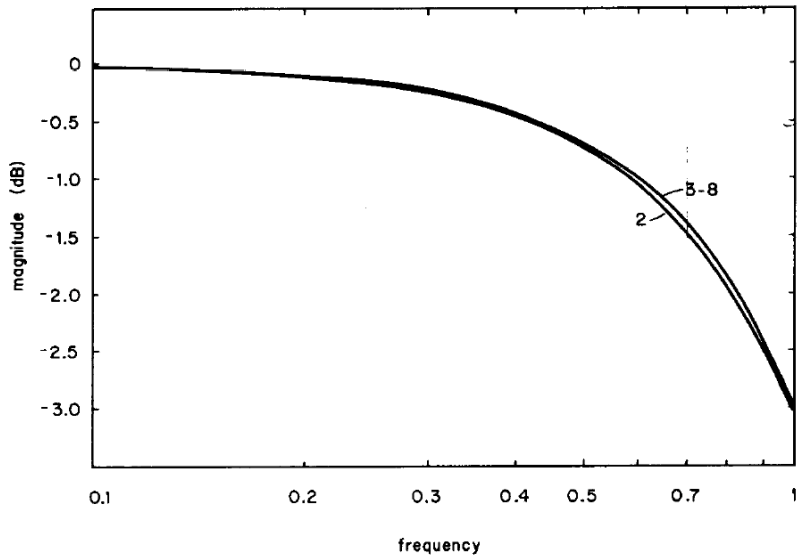

Figure 6.1 Pass-band magnitude response of lowpass Bessel filters.

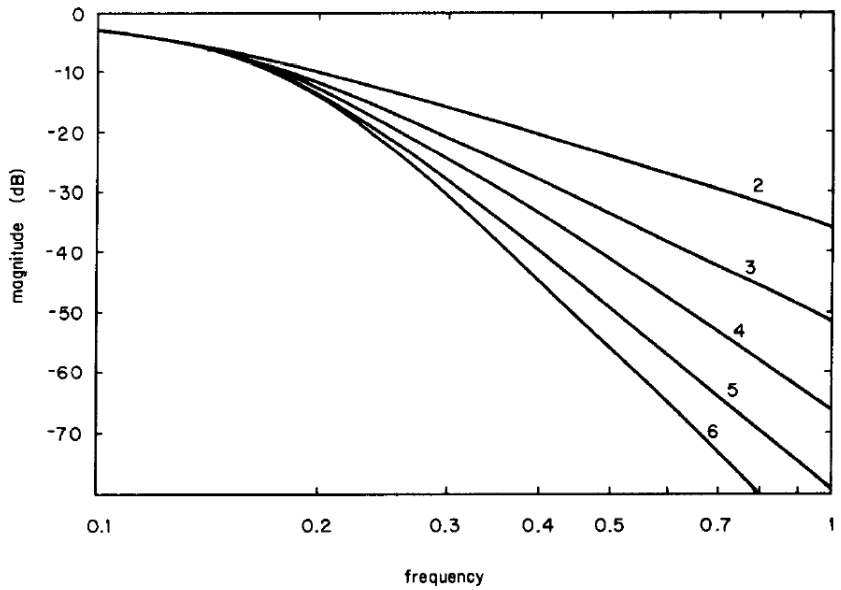

Figure 6.2 Stop-band magnitude response of lowpass Bessel filters.

Frequency Response Approximations

The Bessel approximation

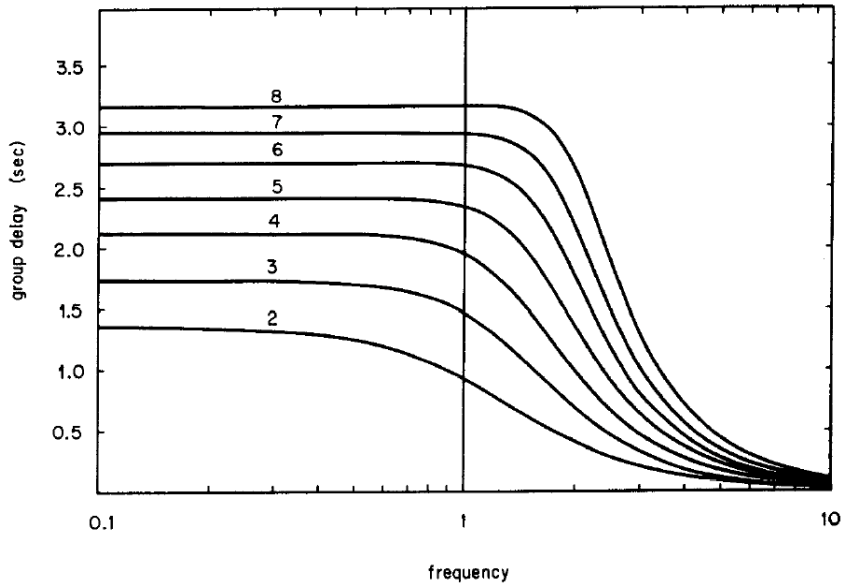

Figure 6.3 Group-delay response of lowpass Bessel filters.

Group delay: $$\tau_g(\omega) = -\frac{d\varphi(\omega)}{d\omega}$$

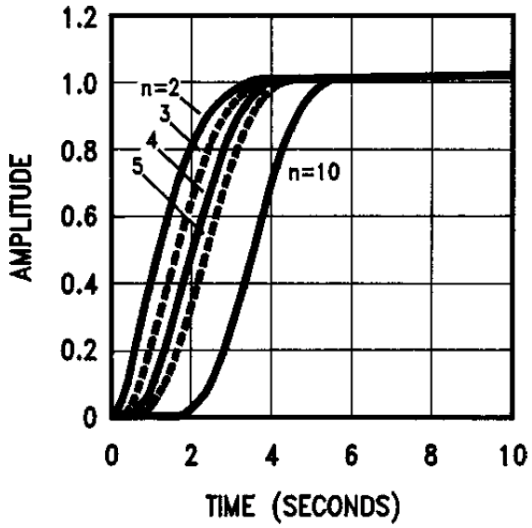

Frequency Response Approximations

The Bessel approximation

TABLE 6.2 Poles of Bessel Filter Normalized to Have Unit Delay at $\omega = 0$

n	Pole values
2	$-1.5 \pm 0.8660j$
3	-2.3222
	$-1.8390 \pm 1.7543j$
4	$-2.1039 \pm 2.6575j$
	$-2.8961 \pm 0.8672j$
5	-3.6467
	$-2.3247 \pm 3.5710j$
	$-3.3520 \pm 1.7427j$
6	$-2.5158 \pm 4.4927j$
	$-3.7357 \pm 2.6263j$
	$-4.2484 \pm 0.8675j$
7	-4.9716
	$-2.6857 \pm 5.4206j$
	$-4.0701 \pm 3.5173j$
	$-4.7584 \pm 1.7393j$
8	$-5.2049 \pm 2.6162j$
	$-4.3683 \pm 4.4146j$
	$-2.8388 \pm 6.3540j$
	$-5.5878 \pm 0.8676j$

Frequency Response Approximations

Different approximations comparison

- Magnitude responses of the Butterworth third-order lowpass filter and the corresponding Chebyshev (1 dB ripple) and Bessel filters.

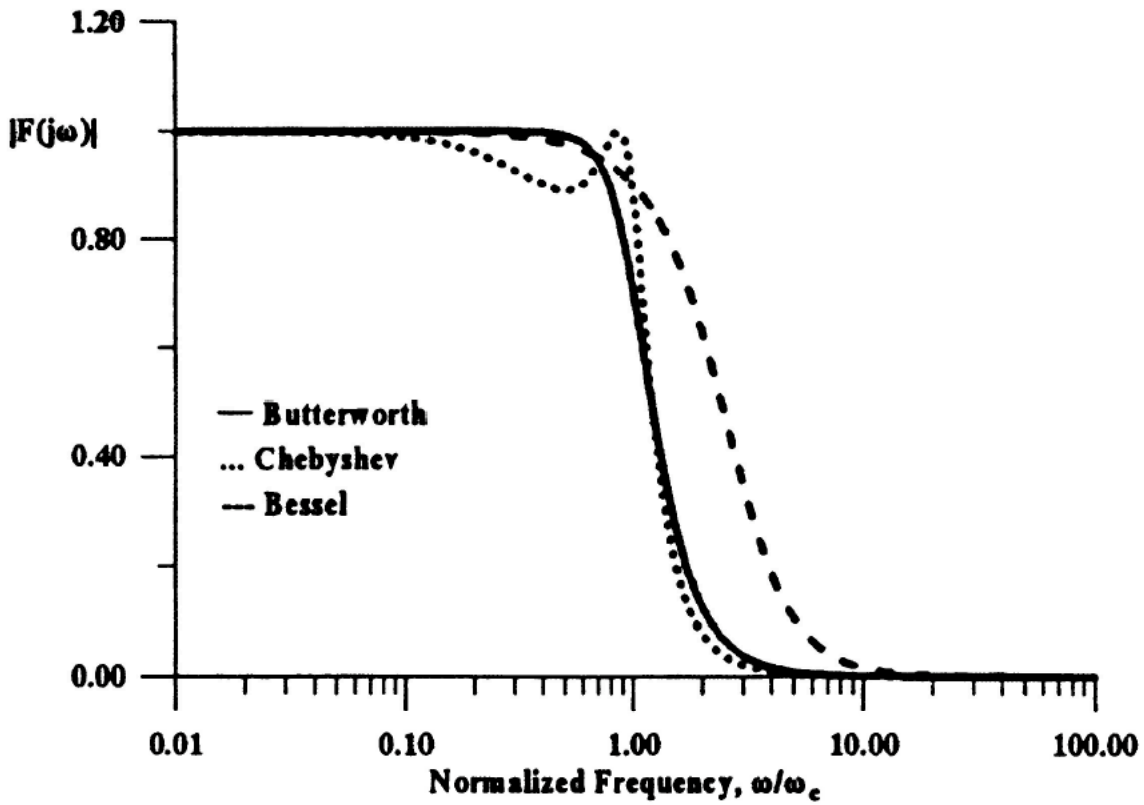

Frequency Response Approximations

Different approximations comparison: Summary

- Butterworth Response

☺ Maximally flat magnitude response in the pass-band

☺ Its pulse response is better than Chebyshev

☺ Its rate of attenuation is better than that of Bessel

☹ Some overshoot and ringing is exhibited in step response

- Chebyshev Response

☺ Better attenuation beyond the pass-band than Butterworth

☹ Ripple in pass-band may be objectionable

☹ A considerable ringing in step response

- Bessel Response

☺ The best step response: very little overshoot or ringing

☹ A slower rate of attenuation beyond the pass-band than Butterworth

Frequency Response Approximations

The elliptic approximation

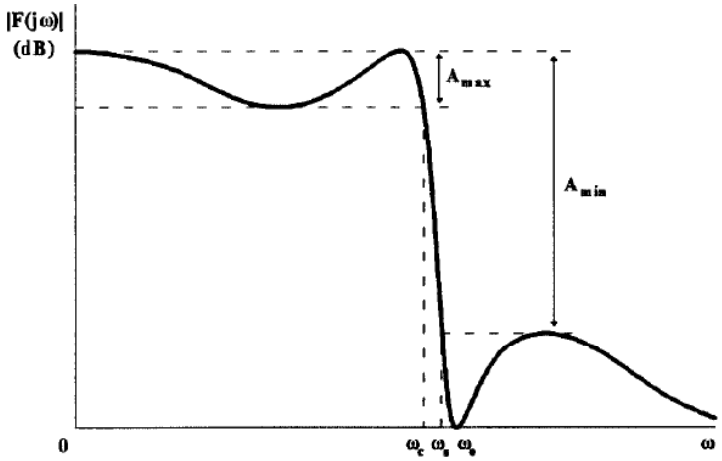

- Example of a elliptic low-pass amplitude response
- This particular filter is 4th-order with A_{max}=0.5 dB and f_s/f_c=2

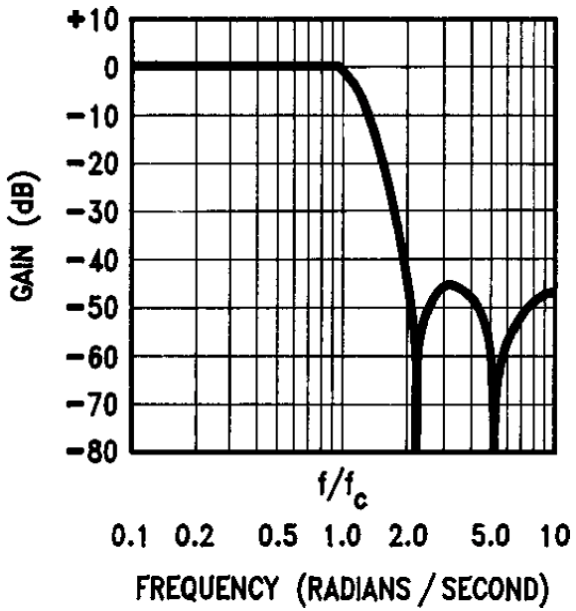

Designing a filter using the Tables

Summary

- The above tables refer to the case of a prototype filter with characteristic frequency equal to ω_C=1rad/sec

- They can be used (with proper transformations) to

  Synthetyze low-pass filter with arbitrary ω_C

  Synthetyze band-pass filter with arbitrary center frequency and passband

  Synthetyze high-pass filter with arbitrary ω_C

- Typically this is done automatically by everywhere available software :

  MATLAB: filtdemo

  etc……

Designing a filter using the Tables

Lowpass design example

- A linear phase (Bessel) 2nd order filter with ω_C = 200 rad/sec is designed
- Bessel prototype poles

ω_C= 1 rad/sec

➔ $p_{1,2}$ = -1.5 ± 0.866*j

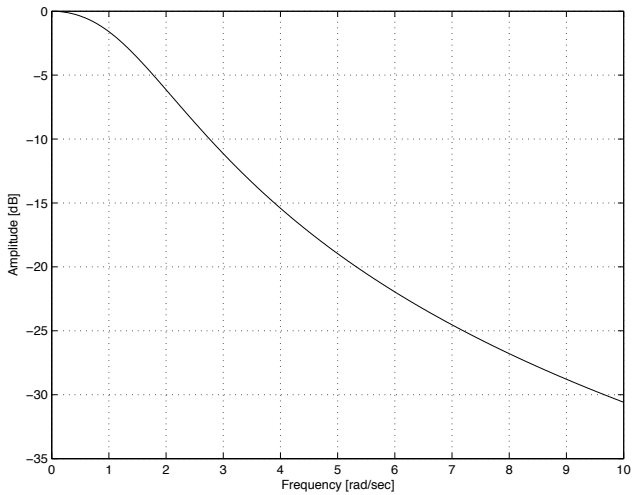

- Modified Bessel poles

ω_C= 200 rad/sec

➔ $p_{1,2}$ = (-1.5 ± 0.866*j) · 200

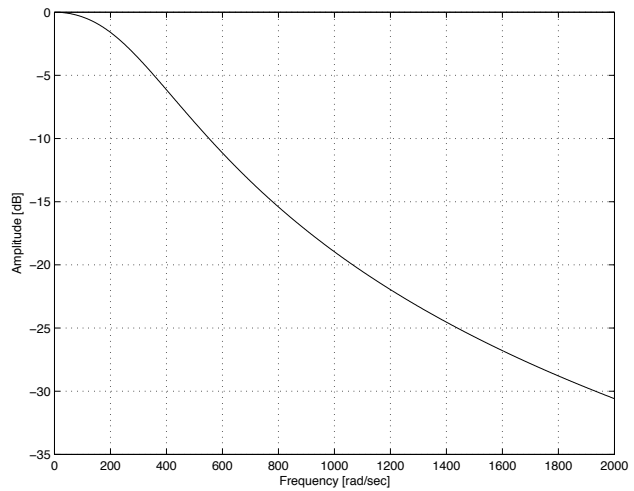

MATLAB Functions for Analog Filter Design

- Transfer function plot

```
FREQS Laplace-transform (s-domain) frequency response.
    H = FREQS(B,A,W) returns the complex frequency response vector H
    of the filter B/A:
                          nb-1          nb-2
            B(s)   b(1)s     +  b(2)s     + ... +  b(nb)
      H(s) = ---- = ------------------------------------
                          na-1          na-2
            A(s)   a(1)s     +  a(2)s     + ... +  a(na)

    given the numerator and denominator coefficients in vectors B and A.
    The frequency response is evaluated at the points specified in
    vector W (in rad/s).  The magnitude and phase can be graphed by
    calling FREQS(B,A,W) with no output arguments.

    [H,W] = FREQS(B,A) automatically picks a set of 200 frequencies W on
    which the frequency response is computed.  FREQS(B,A,N) picks N
    frequencies.

    See also LOGSPACE, POLYVAL, INVFREQS, and FREQZ.
```

MATLAB Functions for Analog Filter Design

- Butterwotth filter order selection

```
BUTTORD Butterworth filter order selection.
    [N, Wn] = BUTTORD(Wp, Ws, Rp, Rs) returns the order N of the lowest
    order digital Butterworth filter that loses no more than Rp dB in
    the passband and has at least Rs dB of attenuation in the stopband.
    Wp and Ws are the passband and stopband edge frequencies, normalized
    from 0 to 1 (where 1 corresponds to pi radians/sample). For example,
        Lowpass:    Wp = .1,      Ws = .2
        Highpass:   Wp = .2,      Ws = .1
        Bandpass:   Wp = [.2 .7], Ws = [.1 .8]
        Bandstop:   Wp = [.1 .8], Ws = [.2 .7]
    BUTTORD also returns Wn, the Butterworth natural frequency (or,
    the "3 dB frequency") to use with BUTTER to achieve the specifications.

    [N, Wn] = BUTTORD(Wp, Ws, Rp, Rs, 's') does the computation for an
    analog filter, in which case Wp and Ws are in radians/second.

    When Rp is chosen as 3 dB, the Wn in BUTTER is equal to Wp in BUTTORD.

    See also BUTTER, CHEB1ORD, CHEB2ORD, ELLIPORD.
```

MATLAB Functions for Analog Filter Design

- Butterworth Transfer function calculation

```
BUTTER Butterworth digital and analog filter design.
    [B,A] = BUTTER(N,Wn) designs an Nth order lowpass digital
    Butterworth filter and returns the filter coefficients in length
    N+1 vectors B (numerator) and A (denominator). The coefficients
    are listed in descending powers of z. The cutoff frequency
    Wn must be 0.0 < Wn < 1.0, with 1.0 corresponding to
    half the sample rate.

    If Wn is a two-element vector, Wn = [W1 W2], BUTTER returns an
    order 2N bandpass filter with passband  W1 < W < W2.
    [B,A] = BUTTER(N,Wn,'high') designs a highpass filter.
    [B,A] = BUTTER(N,Wn,'stop') is a bandstop filter if Wn = [W1 W2].

    When used with three left-hand arguments, as in
    [Z,P,K] = BUTTER(...), the zeros and poles are returned in
    length N column vectors Z and P, and the gain in scalar K.

    When used with four left-hand arguments, as in
    [A,B,C,D] = BUTTER(...), state-space matrices are returned.

    BUTTER(N,Wn,'s'), BUTTER(N,Wn,'high','s') and BUTTER(N,Wn,'stop','s')
    design analog Butterworth filters.  In this case, Wn is in [rad/s]
    and it can be greater than 1.0.

    See also BUTTORD, BESSELF, CHEBY1, CHEBY2, ELLIP, FREQZ, FILTER.
```

MATLAB Functions for Analog Filter Design

```
Design example: Lowpass filter with fo=30kHz with 2dB and -30dB stopband at 100kHz
STEP 1 – Filter order evaluation
>> [N, Wn] = buttord(30e3*2*pi, 100e3*2*pi, 2, 30, 's')
N =
     4
Wn =
   2.6499e+05
STEP 2 – Transfer function calculation
>> [num,den]=butter(N,Wn,'s')
num =
   1.0e+21 *
         0         0         0         0    4.9310
den =
   1.0e+21 *
    0.0000    0.0000    0.0000    0.0000    4.9310

>> den'
ans =
1.000000000000000e+00
     6.924597294806722e+05
     2.397502384762228e+11
     4.862536635311685e+16
     4.931019606075012e+21
STEP 3 – Filter transfer function plot
>> wf=2*pi*(1e3:1e3:200e3);
>> freqs(num,den,wf)
>> mod=20*log10(abs(freqs(num,den,wf)));
>> plot(wf/(2*pi),mod)
```

High-order filters

- There are several way to realize high order (> 2) filters:
- Cascade realization
- Multiple loop feedback

High order filters

Cascade realization

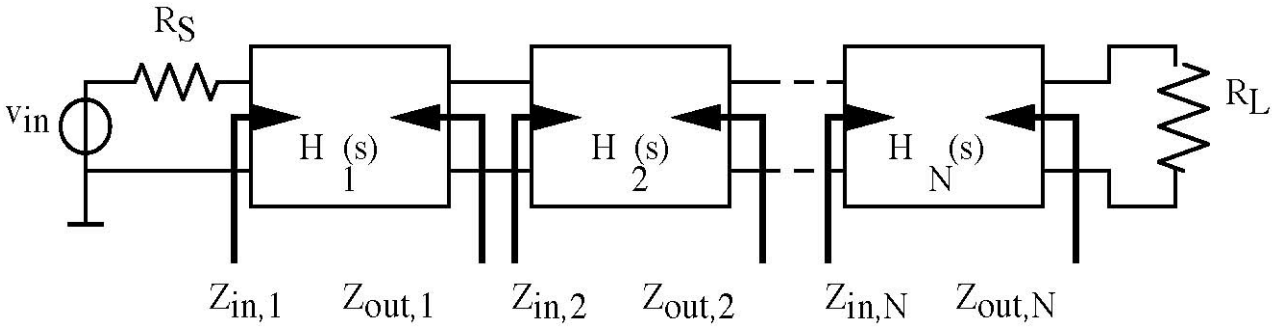

- It consists in the cascade connection of isolated 1st order & biquad sections
- $H_i(s)$ is the biquad transfer function

$$H(s) = \frac{V_o}{V_i} = \prod_{i=1}^{N} H_i(s)$$

- For getting isolation it must be:

$$R_s \ll Z_{in,1}$$

$$Z_{out,1} \ll Z_{in,i+1}$$

$$Z_{out,N} \ll R_L$$

High order filters

Cascade realization

$$H(s) = \frac{(s+t_{z1})\cdot(s+t_{z2})\cdot\ldots\cdot(s^2+s\cdot\omega_{z1}/Q_{z1}+\omega_{z1}^2)\cdot\ldots\ldots}{(s+t_{p1})\cdot(s+t_{p2})\cdot\ldots\cdot(s^2+s\cdot\omega_{p1}/Q_{p1}+\omega_{p1}^2)\cdot\ldots\ldots}$$

$$H(s) = \frac{(s+t_{z1})}{(s+t_{p1})}\cdot\frac{(s+t_{z2})}{(s+t_{p2})}\cdot\ldots\ldots\cdot\frac{(s^2+s\cdot\omega_{z1}/Q_{z1}+\omega_{z1}^2)}{(s^2+s\cdot\omega_{p1}/Q_{p1}+\omega_{p1}^2)}\cdot\ldots\ldots$$

- Design problem: Group together pole and zero pairs (pole-zero pairing)

  It affects the dynamic range and the sensitivity.

  There are not general and consistent rules for the pole-zero pairing in order to minimize the sensitivity.

- Two opposite approaches are suggested in the literature:

  Pair the high-Q poles with far away zeros

  Pair the high-Q poles with closed zeros

- The only solution is to try different pairing and to compare them with Monte Carlo analysis
- For order > 6 the cascade design is inherently more sensitive to component variation than multiple-loop feedback realizations (Is it true for the phase ??)

High order filters

Multiple loop feedbacks

The previous 1st and 2nd order cells can be used to build up high order filters

- Several topologies:

- Follow the leader feedback (FLF)
- Inverse follow the leader (IFLF)
- Generalize follow the leader feedback (GFLF)
- Primary resonator block (PRB)
- Leapfrog feedback (LF)
- Modified leapfrog feedback (MLF)
- Coupled biquad (CB)
- Minimum sensitivity feedback(MSF)

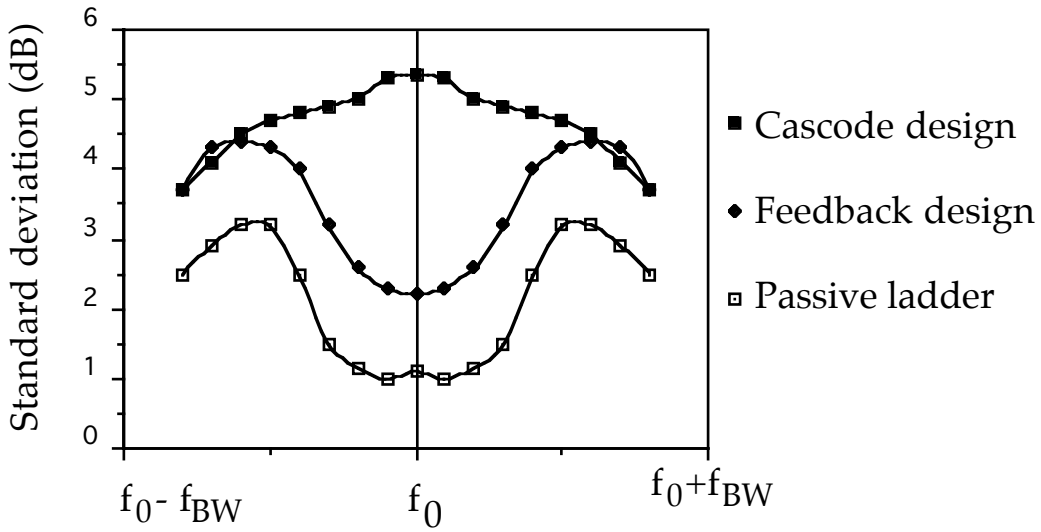

SC Ladder filters

- Passive LC ladder filters exhibit in the passband very low sensitivities to component variations
- From LC passive ladders, the same networking philosophy has been reproduced in other filtering techniques
- In 60's the active ladder filters were made of resistors, capacitors and op amps

- Typical all-pole low-pass *RLC* network (5th order), doubly and equally terminated for best sensitivity performance

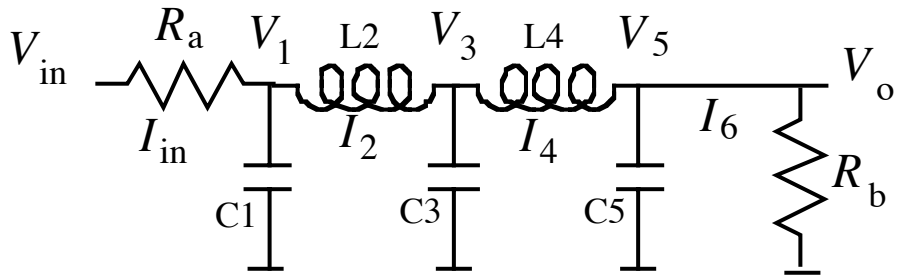

- The active realization will implement the same current-voltage relationships of capacitors and inductors of the passive networks
- These relationships are of integral nature
- => They will be naturally implemented by using first order integrators

Leapfrog Topology

Design procedure

- Simulate passive ladder networks, via signal flow graph

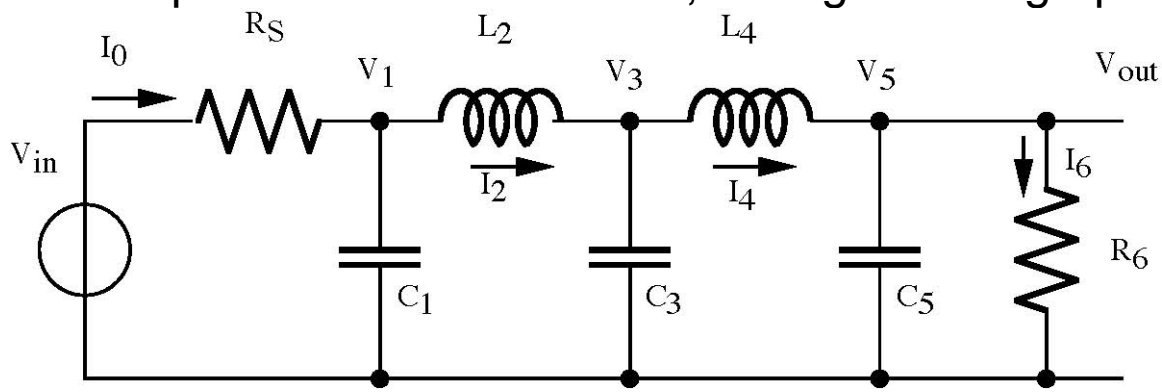

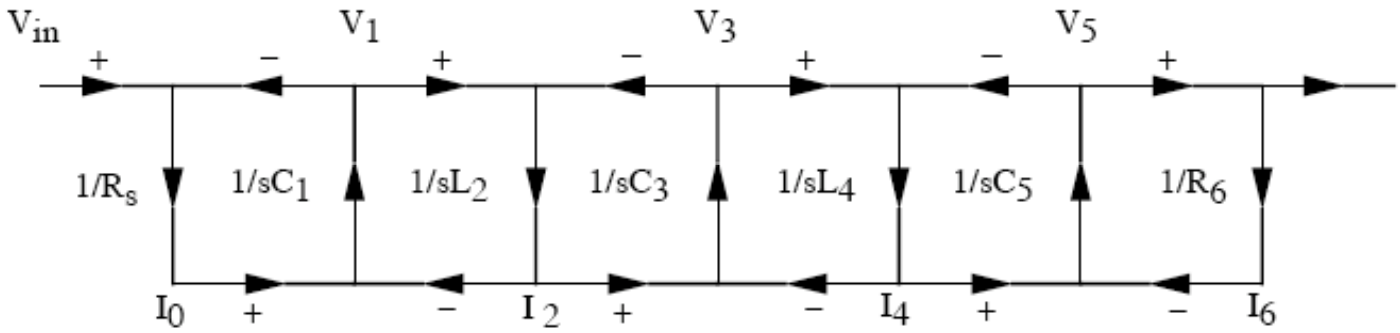

$$I_0 = \frac{1}{R_S} \cdot (V_{in} - V_1)$$

$$V_1 = \frac{1}{s \cdot C_1} \cdot (I_0 - I_2)$$

$$I_2 = \frac{1}{s \cdot L_2} \cdot (V_1 - V_3)$$

$$V_3 = \frac{1}{s \cdot C_3} \cdot (I_2 - I_4)$$

$$I_4 = \frac{1}{s \cdot L_4} \cdot (V_3 - V_5)$$

$$V_5 = \frac{1}{s \cdot C_5} \cdot (I_4 - I_6)$$

$$I_6 = \frac{1}{R_S} V_5$$

$$V_{out} = V_5$$

- Multiply each current by an arbitrary resistance

$V_0 = R \cdot I_0$; $V_2 = R \cdot I_2$; $V_4 = R \cdot I_4$; $V_6 = R \cdot I_6$

Leapfrog Topology

Design procedure

$V_0 = R \cdot I_0$; $V_2 = R \cdot I_2$; $V_4 = R \cdot I_4$; $V_6 = R \cdot I_6$

The obtained set of equation is

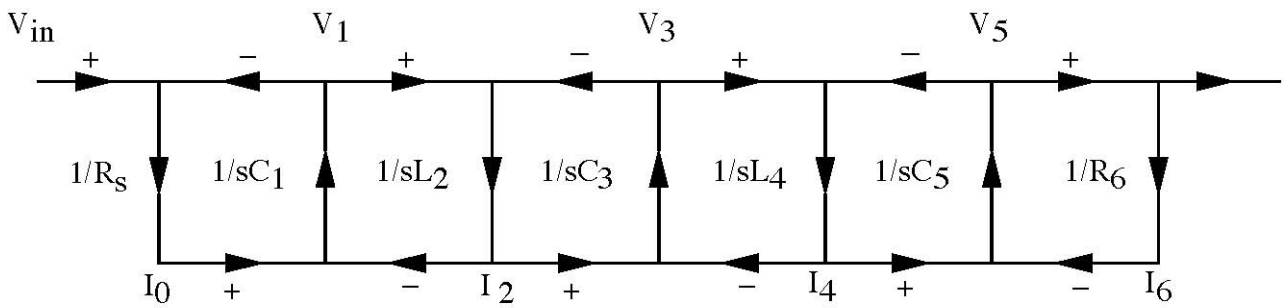

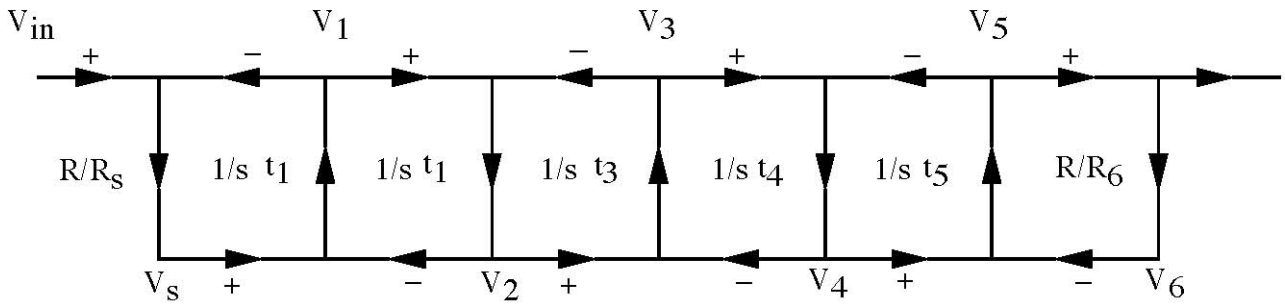

$$V_0 = \frac{R}{R_S} \cdot (V_{in} - V_1)$$

$$V_1 = \frac{1}{s \cdot R \cdot C_1} \cdot (V_0 - V_2)$$

$$V_2 = \frac{R}{s \cdot L_2} \cdot (V_1 - V_3)$$

$$V_3 = \frac{1}{s \cdot R \cdot C_3} \cdot (V_2 - V_4)$$

$$V_4 = \frac{R}{s \cdot L_4} \cdot (V_3 - V_5)$$

$$V_5 = \frac{1}{s \cdot R \cdot C_5} \cdot (V_4 - V_6)$$

$$V_6 = \frac{R}{R_S} V_5$$

$$V_{out} = V_5$$

Leapfrog Topology

Design procedure

- The original set of equations and the modified one can be represented with the signal flow graphs:

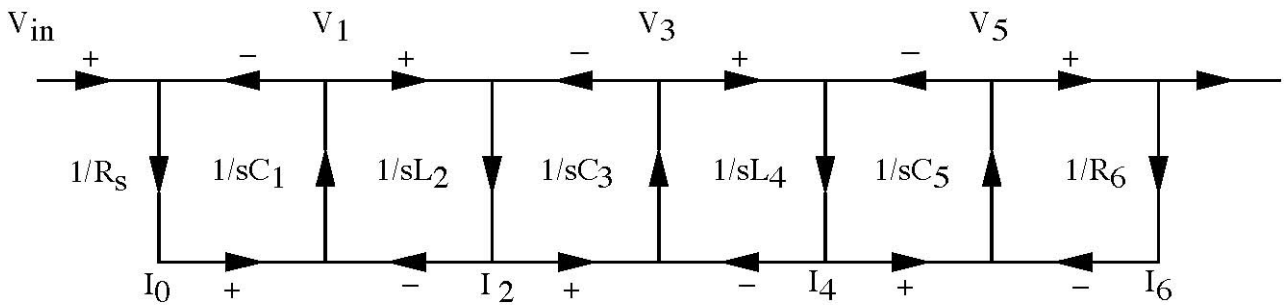

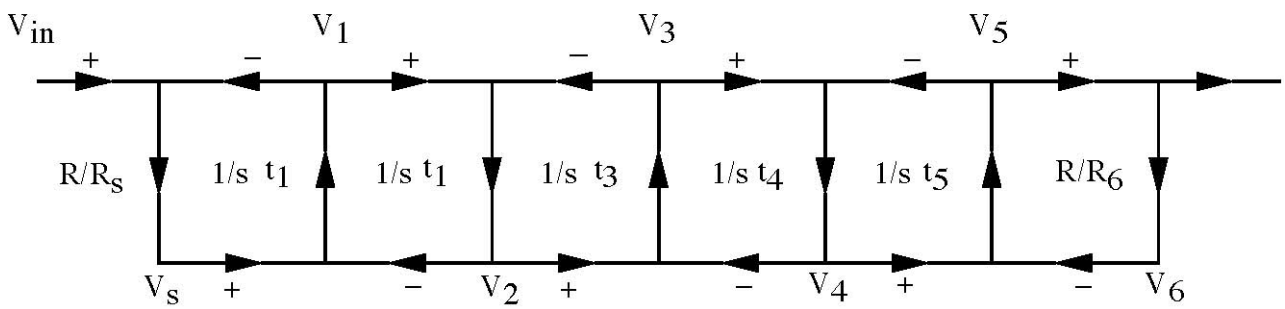

- The final flow-graph presents the integrator as building block

$$V_0 = \frac{R}{R_S} \cdot (V_{in} - V_1)$$

$$V_1 = \frac{1}{s \cdot R \cdot C_1} \cdot (V_0 - V_2)$$

$$V_2 = \frac{R}{s \cdot L_2} \cdot (V_1 - V_3)$$

$$V_3 = \frac{1}{s \cdot R \cdot C_3} \cdot (V_2 - V_4)$$

$$V_4 = \frac{R}{s \cdot L_4} \cdot (V_3 - V_5)$$

$$V_5 = \frac{1}{s \cdot R \cdot C_5} \cdot (V_4 - V_6)$$

$$V_6 = \frac{R}{R_S} V_5$$

$$V_{out} = V_5$$

Leapfrog Topology

Design procedure

- Scaling of the flow graph:

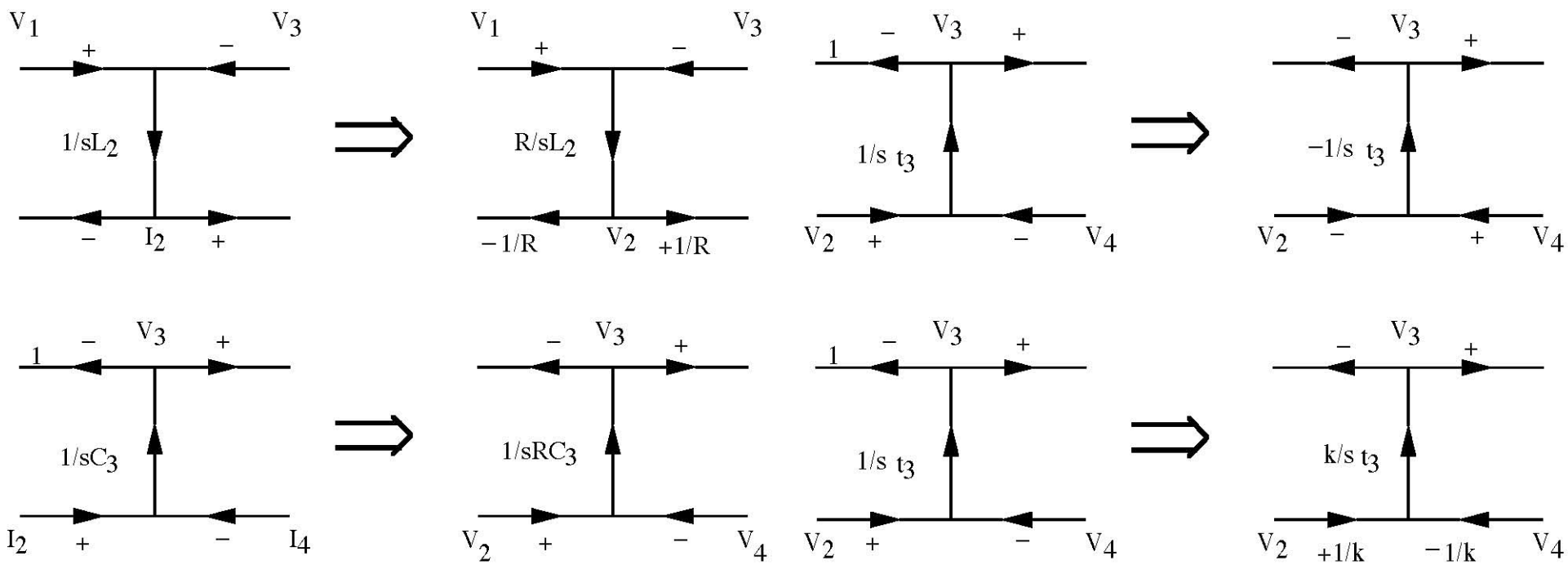

Variable transformation

Scaling by constants

- The scaling of the flow graph is used in order to obtain realizable active implementations

Leapfrog Topology

Design procedure

- The electrical network is obtained by replacing the integrators with a circuit implementation

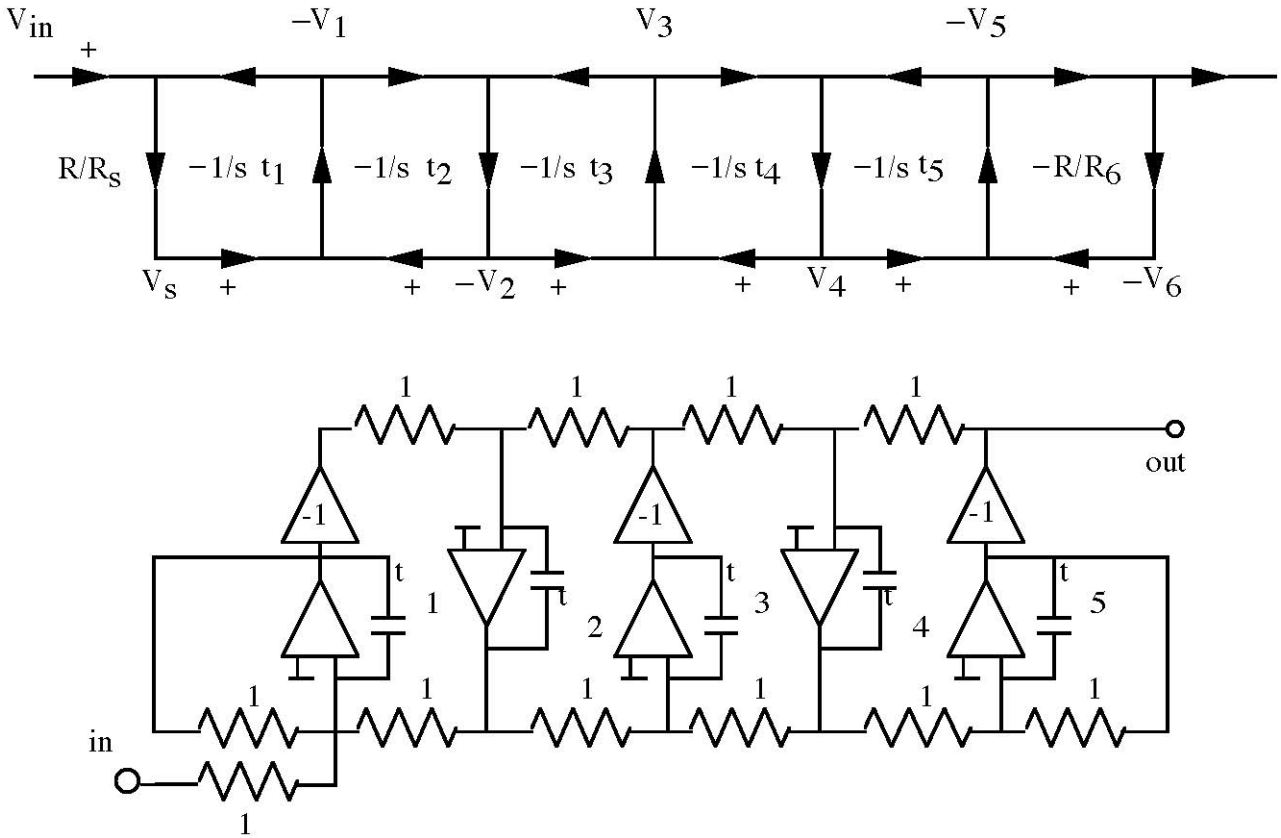

- Interconnection of second order loops ($R \approx R_s \approx R_6$)

Leapfrog Topology

Design procedure

- The scaling is also useful for dynamic range optimization:

- V_1 is too small V_2 is too high

$$V_1 \rightarrow K_1 \cdot V_1$$
$$V_2 \rightarrow V_1 / K_2$$

- *Result:* all the op-amp saturate (at different frequency) with the same input level

- Perform a SPICE simulation of the active (or passive) network in order to determine the scaling factors

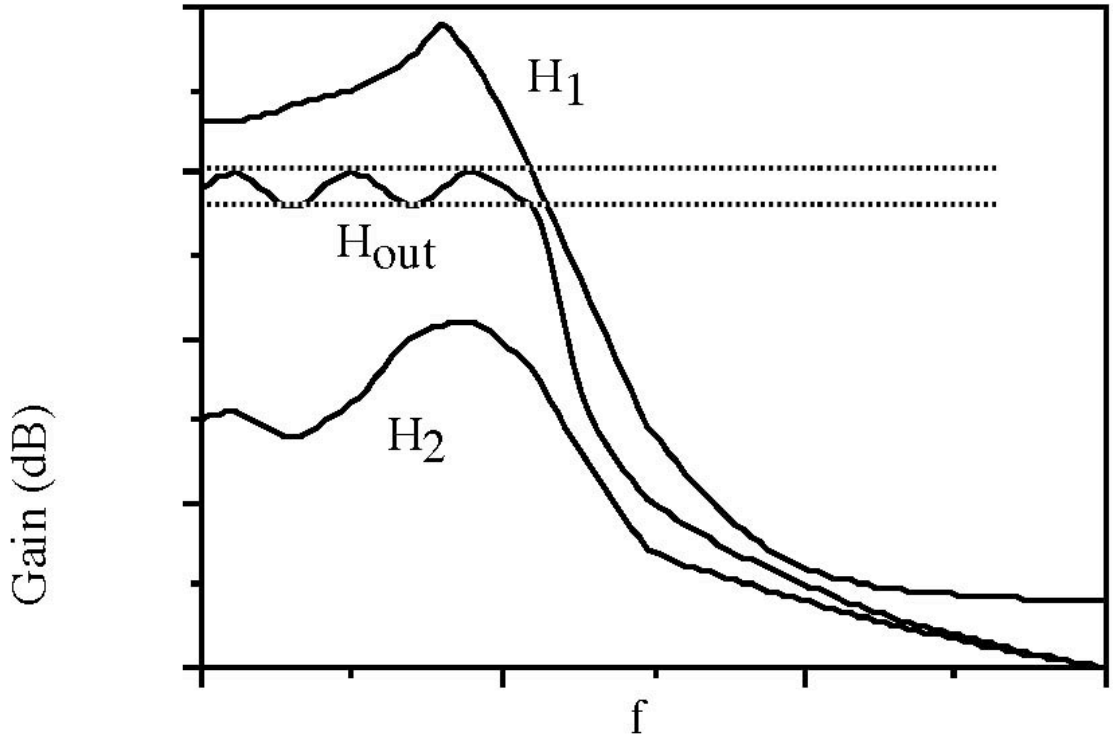

Leapfrog Topology

Design procedure: Elliptic design

- If the passive prototype has transmission zeros at the finite (elliptic filters), it has the form (low pass)

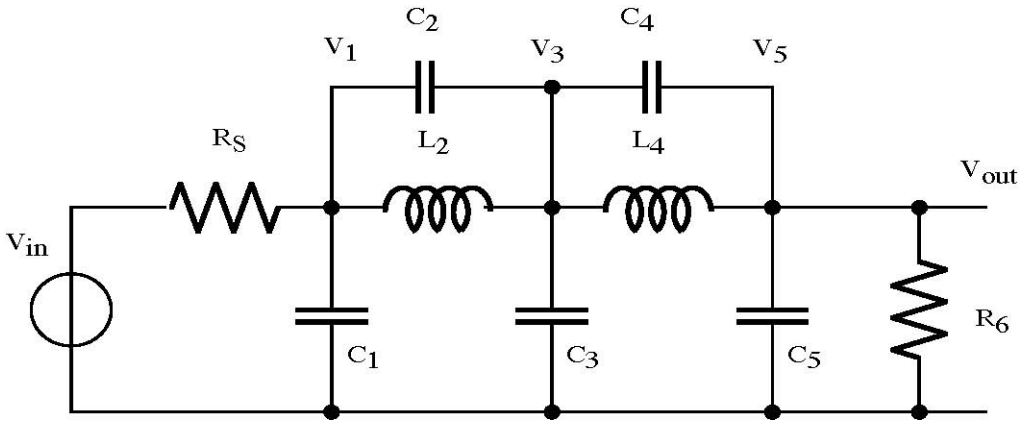

- Before to describe the network and sketch the flow diagram it is worth to remove the bridging capacitors C2 and C4 through the use of the Thevenin's theorem

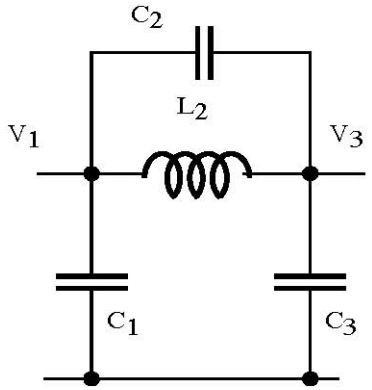

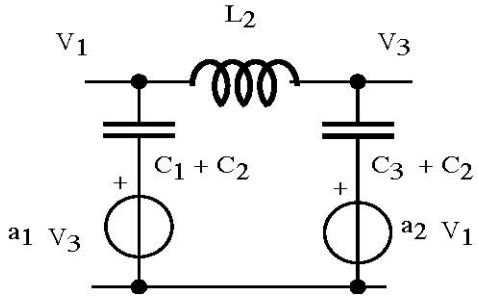

$a_1 = C_2/(C_1 + C_2)$ $a_2 = C_2/(C_3 + C_2)$

Leapfrog Topology

Design procedure: Elliptic design

- Similar modification follows if C_4 is removed

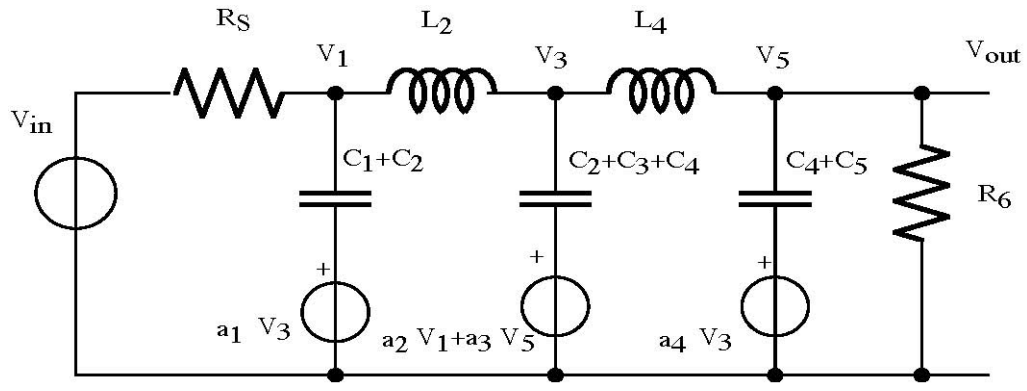

$a_1 = C_2/(C_1+C_2)$ $\quad a_2 = C_2/(C_3+C_2)$

$a_3 = C_4/(C_3+C_4)$ $\quad a_4 = C_4/(C_5+C_4)$

- The equations concerning the state variables V_1, V_3 and V_5 change:

$$V_1 = \frac{1}{sC'_1}(I_s - I_2) + \frac{V_3 C_2}{C_1} \qquad C_1' = C_1 + C_2$$

$$V_3 = \frac{1}{sC'_3}(I_2 - I_4) + \frac{V_1 C_2}{C_1 + C_3} + \frac{V_5 C_4}{C_3 + C_4} \qquad C_3' = C_2 + C_3 + C_4$$

$$V_5 = \frac{1}{sC'_5}(I_4 - I_6) + \frac{V_3 C_4}{C_5} \qquad C_5' = C_4 + C_5$$

Leapfrog Topology

Design procedure: Elliptic design

- After scalings, aimed to the active realization:

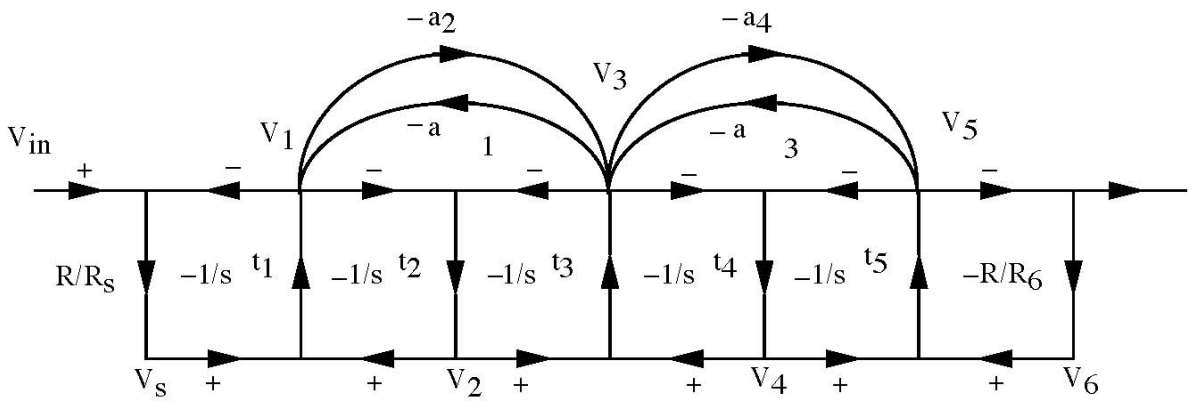

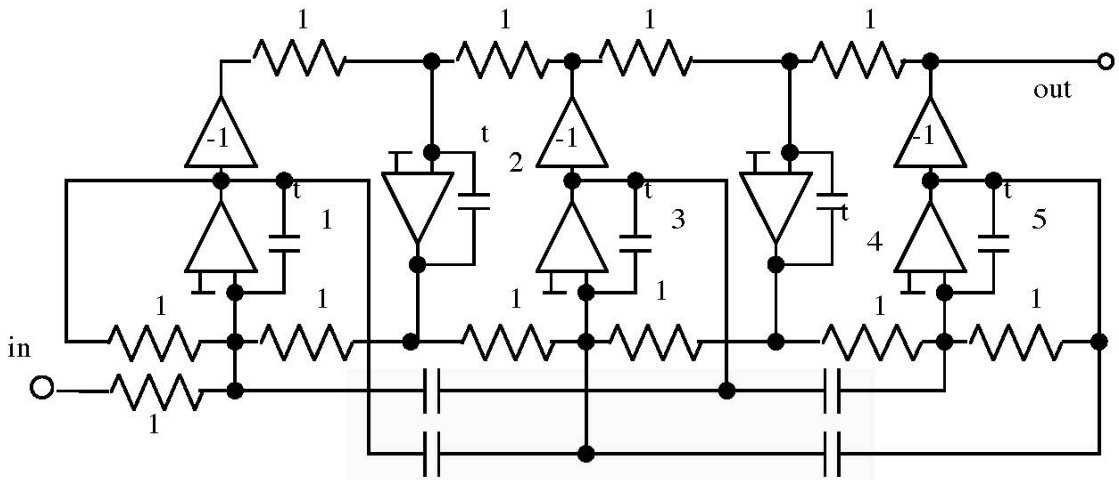

High order SC filter

Low-noise solution

- Inverse-Follow-the-Leader-Feedback

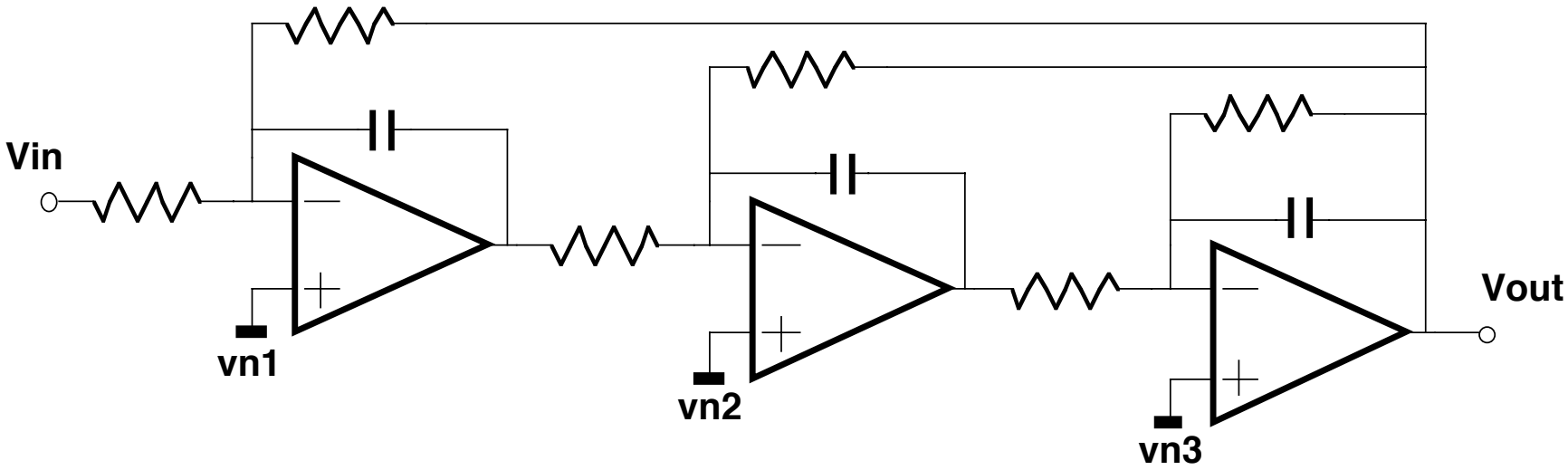

- **At low frequency** only the noise v_{n1} reaches the output node

Resonator pole frequency

- Let's consider a two-integrator loop
- This is a building block for complex poles implementations
- Integrator finite dc-gain = A_o

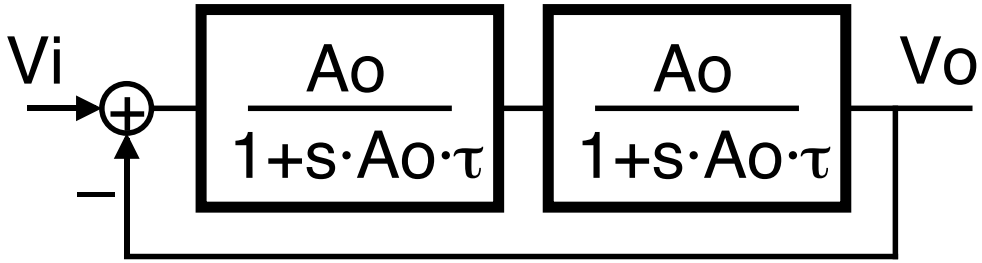

- The poles are given by the roots of the denominator of $H_{closed\_loop}=1+H_1 \cdot H_2$

$$H_{res}(s)=\frac{Forward\_Gain(s)}{1+H_1 \cdot H_2}=\frac{FG(s)}{1+\left(\frac{A_o}{1+s \cdot A_o \cdot \tau}\right)^2}=\frac{FG^*(s)}{(1+s \cdot A_o \cdot \tau)^2+A_o^2}=\frac{FG^*(s)}{s^2 \cdot A_o^2 \cdot \tau^2+2 \cdot s \cdot A_o \cdot \tau+A_o^2}$$

$$H_{res}(s)=\frac{FG^*(s)}{s^2+s \cdot \frac{\omega_o}{Q_{res}}+\omega_o^2}=\frac{FG^*(s)}{s^2+2 \cdot \frac{s}{A_o \cdot \tau}+\frac{1}{\tau^2}}$$

$$\omega_o=\frac{1}{\tau} \qquad Q_{res}=\frac{A_o}{2}$$

- The resonance frequency is given by the loop unity-gain frequency
- The integrator finite gain is limiting the maximum resonator Q_{res}
  - $Q_{res\_ideal}=\infty$ only for $A_o=\infty$

Integrator quality factor

- The integrator transfer function is:

$$H_{\text{int}}(s) = \frac{v_o}{v_i} = \frac{1}{R(\omega) + j \cdot X(\omega)}$$

- The integrator quality factor Q_{int} is defined as:

$$Q_{\text{int}}(\omega) = \frac{X(\omega)}{R(\omega)}$$

- An equivalent definition is

$$Q_{\text{int}} = \frac{1}{\phi_{ideal}[rad] - \phi_{real}[rad]} = \frac{1}{\Delta\phi[rad]}$$

Integrator quality factor

Example: Ideal integrator

$$H_{\text{int}}(s) = \frac{1}{s \cdot \tau}$$

$$Q_{\text{int}}(\omega) = \frac{\omega \cdot \tau}{0} = \infty$$

- Example: Finite-gain integrator

$$H(s) = \frac{A_o}{1 + s \cdot \tau \cdot A_o} = \frac{1}{1/A_o + s \cdot \tau}$$

$$Q_{\text{int}}(\omega) = \frac{\omega \cdot \tau}{1/A_o} = A_o \cdot \omega \cdot \tau \quad \Rightarrow \quad Q_{\text{int}}(1/\tau) = A_o$$

Resonator sensitivity

- In a resonator, the quality factor depends on the phase at the resonance frequency
  - The resonance frequency is the unity-gain frequency of the loop

$$\frac{1}{Q_{real}} \approx \frac{1}{Q_{ideal}} + \delta\varphi_{loop}(\omega_o)$$

- A phase lead ($\delta\varphi_{loop}(\omega_o)$>0) reduces the Q
  - LHS Poles at frequency lower than ω_o
    - Opamp Finite dc-Gain

- A phase lag ($\delta\varphi_{loop}(\omega_o)$<0) increases the Q
  - LHS poles at frequency higher than ω_o
    - High-frequency non-dominant poles

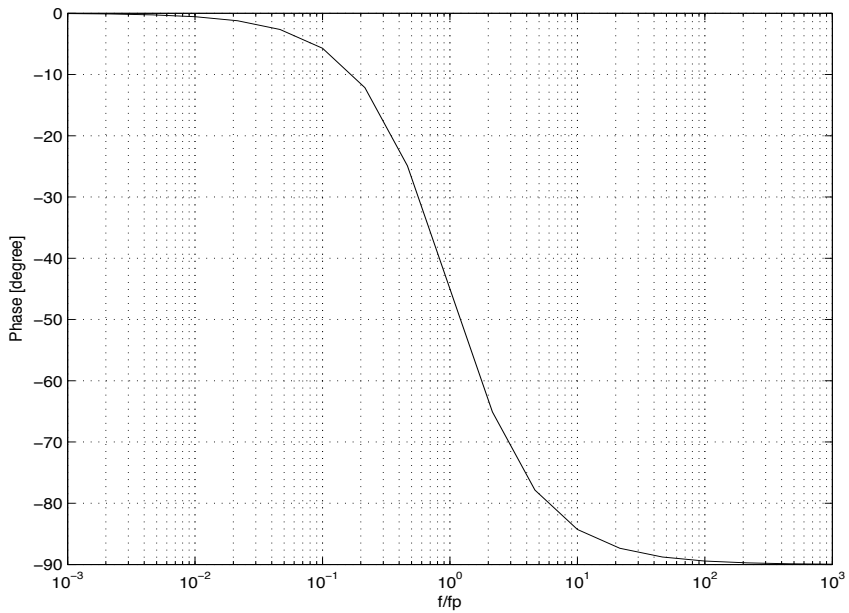

Resonator sensitivity

Amplitude and phase: Single non-dominant pole

- Each integrator presents a phase shift due to a dc-gain (pole at f_p)

$$\delta\varphi(f) = -\arctan(f/f_p) \approx -f/f_p$$

- A two-integrator loop has a phase shift given by

$$\delta\varphi_{tot}(f) = 2\cdot\delta\varphi(f) \approx -2\cdot f/f_c$$

- The two-integrator loop nominal Q (Q_o) deviates to a real value:

$$\frac{1}{Q_{real}} \approx \frac{1}{Q_o} + 2\cdot\delta\varphi(f_o) \approx \frac{1}{Q_o} - 2\cdot f_o/f_p$$

$$\frac{\delta Q_o}{Q_o} \approx 2\cdot Q_o\cdot\frac{f_o}{f_p} < \left[\frac{\delta Q_o}{Q_o}\right]_{specs} \quad \Rightarrow \quad f_p > \frac{2\cdot Q_o\cdot f_o}{\left[\frac{\delta Q_o}{Q_o}\right]_{specs}}$$

For example: f_o=10MHz, Q_o=10, $[\delta Q_o/Q_o]_{specs}$<10% ➔ f_p > 2GHz

Resonator sensitivity

Amplitude and phase error: Multiple singularities

Ideal

Dom.Pole at the origin

- Infinite dc-gain

No secondary poles

- 90° phase at ω_o

$$Q_{\text{int}}^{ideal} = \infty$$

$$\frac{1}{Q_{\text{int}}^{ideal}} = 0$$

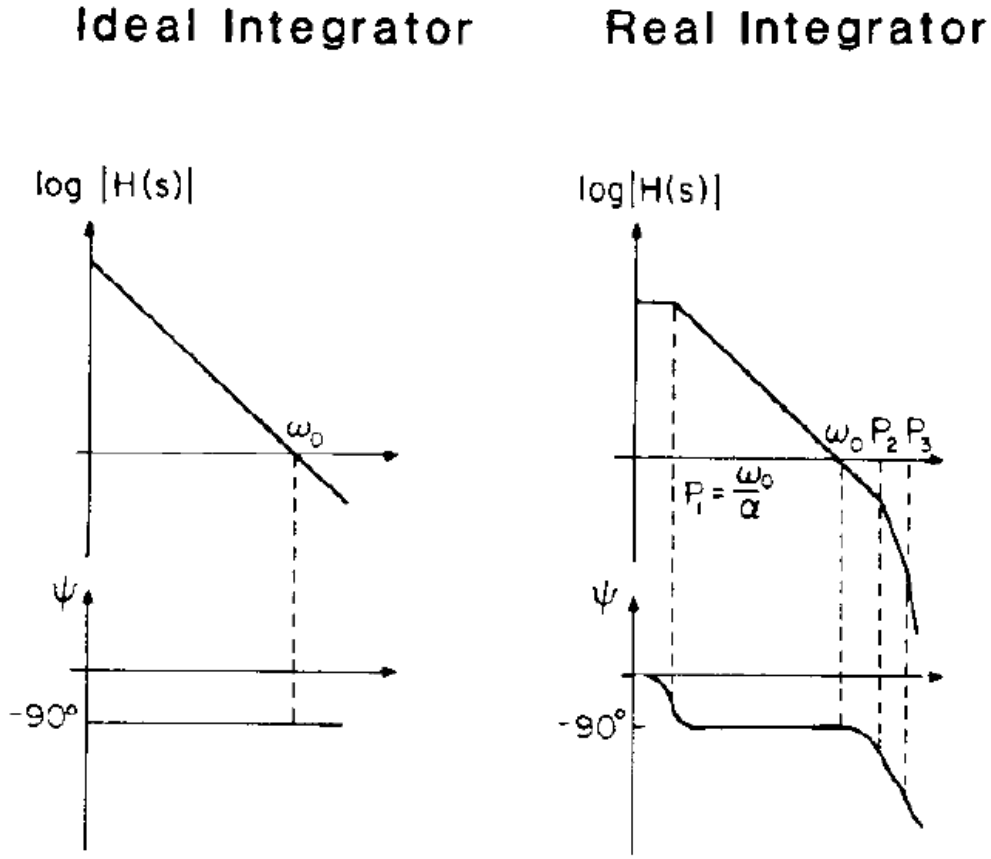

Real

- Dom.Pole at α/ω_o
- α dc-gain

Some secondary poles p_i

- $(90°+\Delta\phi)$ phase at ω_o

$$Q_{\text{int}}^{real} = \boxed{\frac{1}{\alpha}} - \boxed{\sum_{i=2}^{\infty} \frac{1}{p_i}}$$

- The dominat pole gives a **phase lead at ω_o**
- The secondary poles givee a **phase lag at ω_o**

Resonator sensitivity

Amplitude and phase error effects

- Phase lag and phase lead could compensate

  But they depends on different parameters

  A high *Q*-sensitivity results

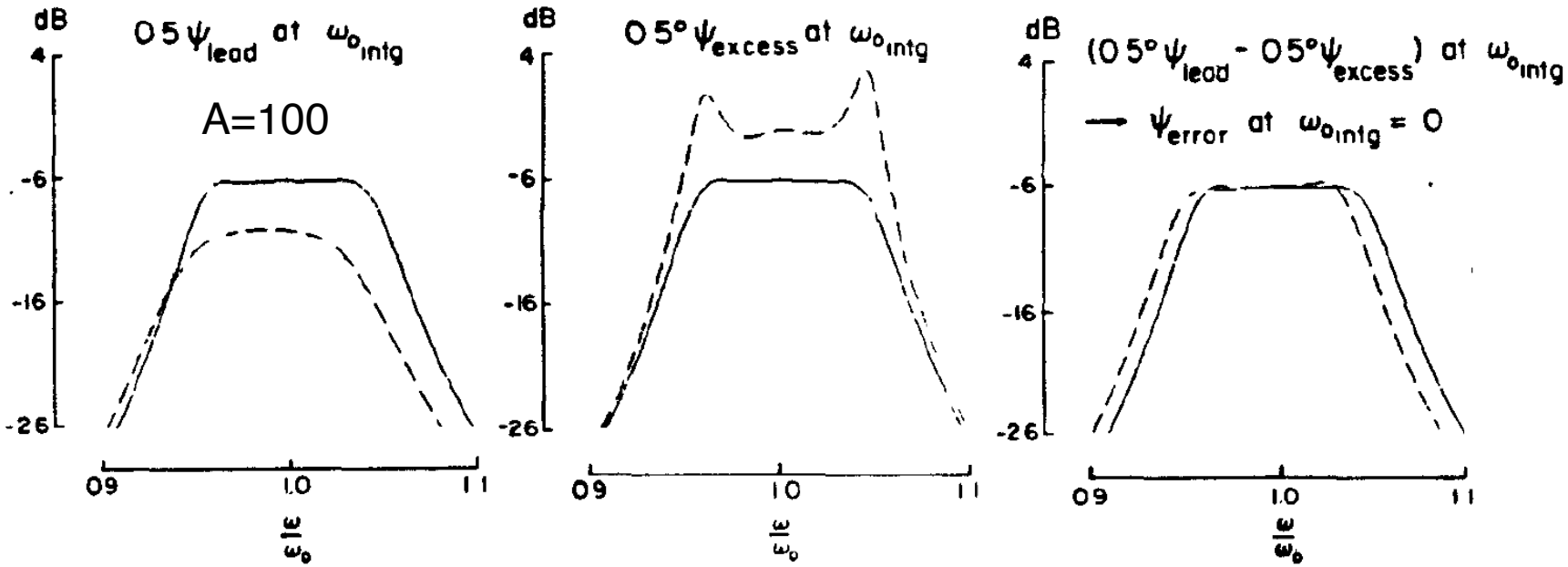

- The best solution is move the singularities as far as possible from ω_o
- The error in the passband is proportional to Q_{filter}/Q_{intg}

Integrator phase values

- Integrator phase

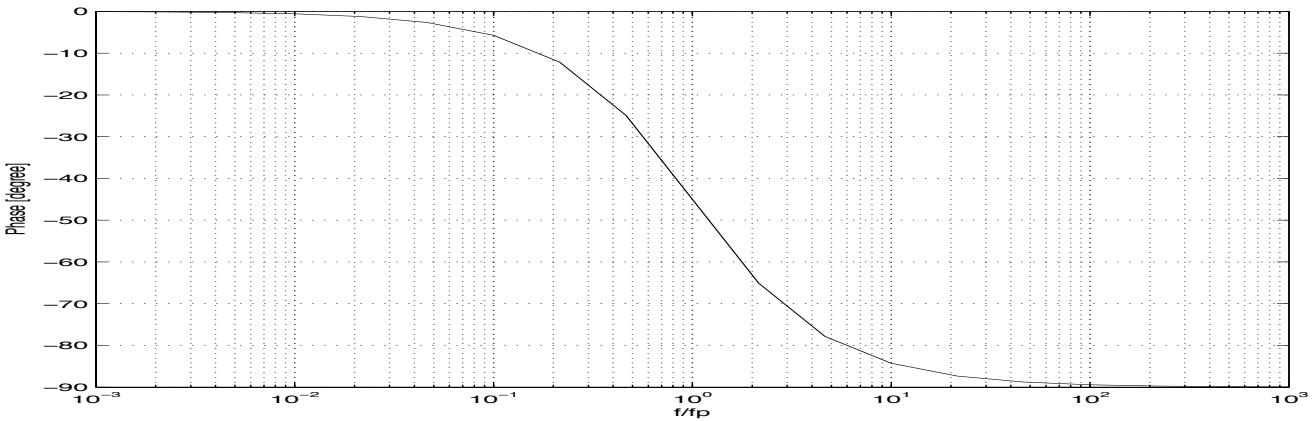

HF Pole Effect

f_o/f_p	Phase Error [°]	Q_{int}
0.0010	-0.0573	-1000.0003
0.0022	-0.1234	-464.1671
0.0046	-0.2659	-215.4445
0.0100	-0.5729	-100.0033
0.0215	-1.2342	-46.4238
0.0464	-2.6575	-21.5598
0.1000	-5.7106	-10.0332
0.2154	-12.1580	-4.7126
0.4642	-24.8988	-2.3011
1.0000	-45.0000	-1.2732

LF Pole Effect

f_o/f_p	Phase Error [°]	Q_{int}
1.0000	45.0000	1.2732
2.1544	65.1009	2.3011
4.6416	77.8419	4.7125
10.0000	84.2894	10.0332
21.5440	87.3424	21.5595
46.4160	88.7658	46.4232
100.0000	89.4271	100.0033
215.4400	89.7341	215.4415
464.1600	89.8766	464.1607
1000.0000	89.9427	1000.0003

Implementation of the Designed Flow-graph

- There are several possibilities to implement the designed flow-graph:
  - Passive
    - RC or LC
  - Active
    - Active-RC
    - MOSFET-C
    - Gm-C
    - Gm-Active-RC
    - Active-Gm-RC
    - Switched-capacitor
    - Switched-current
    - …….

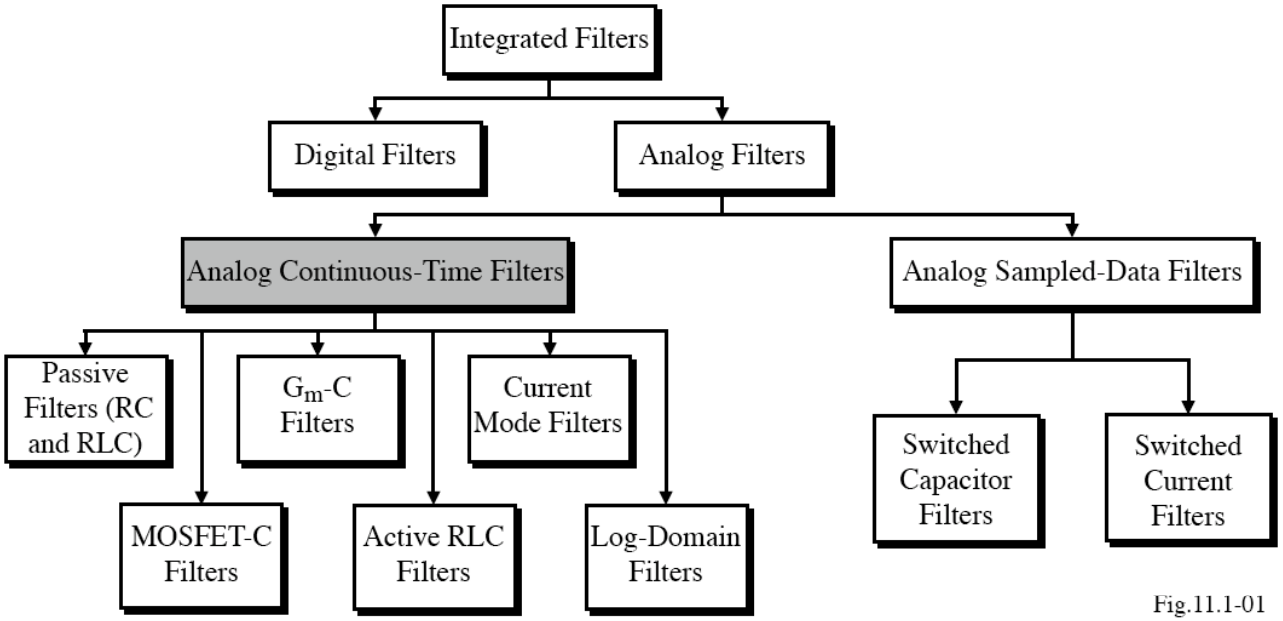

Fig.11.1-01

Analog filter implementations

Different techniques comparison (1998)

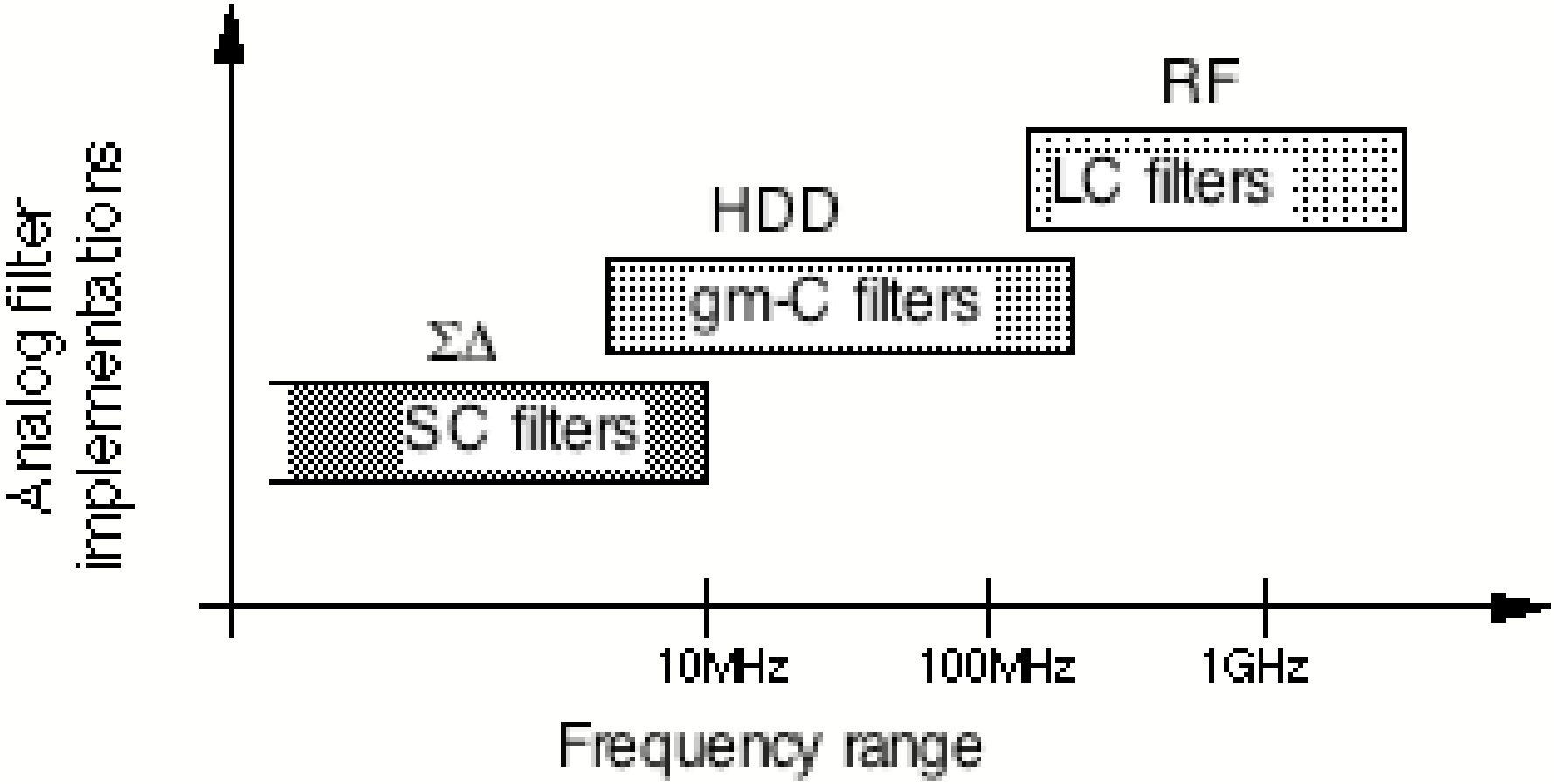

- SC filters are intrinsically tuned (Slave to the clock)
- Continuous-Time filters (Gm-C, LC) need continuous or discrete tuning

Analog Filters Scenario

Different techniques comparison (1998)

It is running with technology scaling

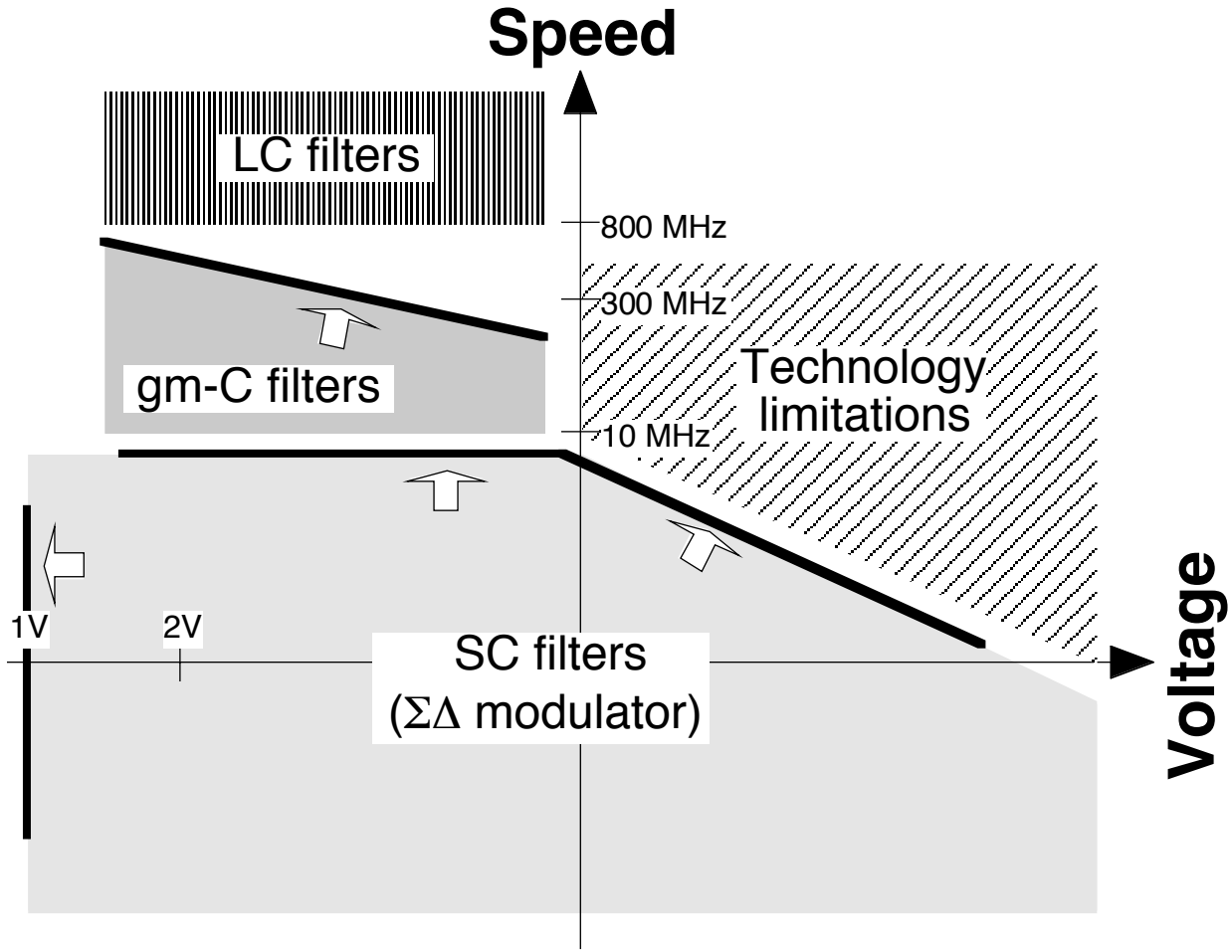

Comparison of Filtering Techniques

Main possible alternatives

- Sampled Domain
  - Switched Capacitor
  - Switched Current

- Intrinsic precision is obtained
- Key problem is turn-on pass transistor switches
- If switches can be turned on rail -to-rail operation can be achieved

- Continuous Time
  - gm-C (open loop approach)
  - MOSFET-C (closed loop approach)
  - Active-RC
  - L-C
- Needs to be tuned to have absolute precision
- Rail-to-Rail swing sometimes difficult

Different Continuous-Time Integrators

Active-RC

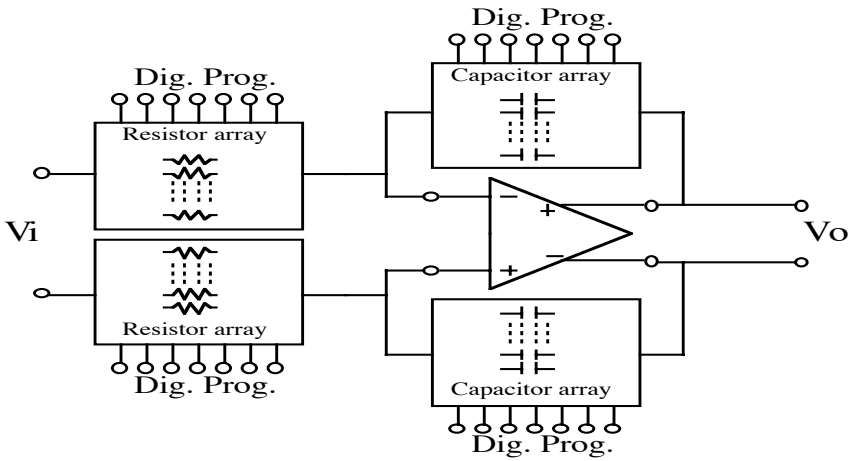

- ☺ Good Linearity even at low voltage
- ☺ Small number of active elements
- ☺ Insensitive to parasitic

- ☹ It must drive low impedance loads
- ☹ No continuous time tuning mechanism
- ☹ Limited speed

MOSFET-C

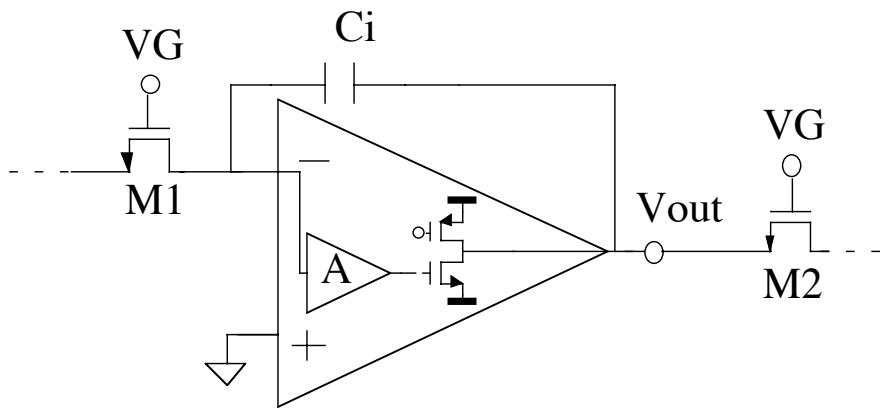

- ☺ Insensitive to parasitic
- ☺ Small number of active elements

- ☹ It must drive low impedance loads
- ☹ Extra singularities due to the opamp
- ☹ Small swing at low voltage due to tuning

Different Continuous-Time Integrators

Gm-C-Opamp

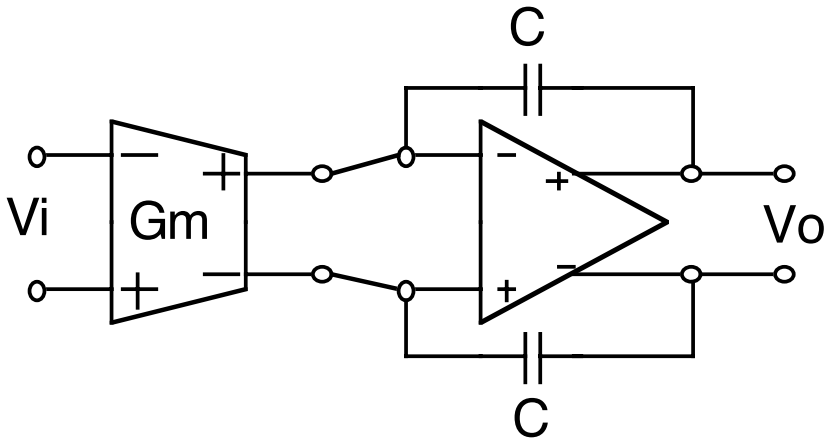

- ☺ Insensitive to parasitics
- ☺ It has not to drive low impedance loads
- ☺ Small output swing transconductors

- ☹ Largest number of active elements
- ☹ Extra poles i.e. not very fast

Gm-C

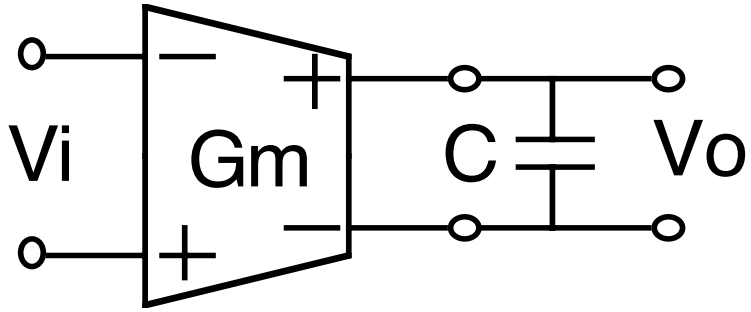

- ☺ Fastest of all possible approaches
- ☺ It has not to drive low impedance loads

- ☹ Sensitive to parasitic capacitance
- ☹ Large input and output signals
- ☹ Larger number of active elements

High-Order Active Filter

Active-Gm-RC

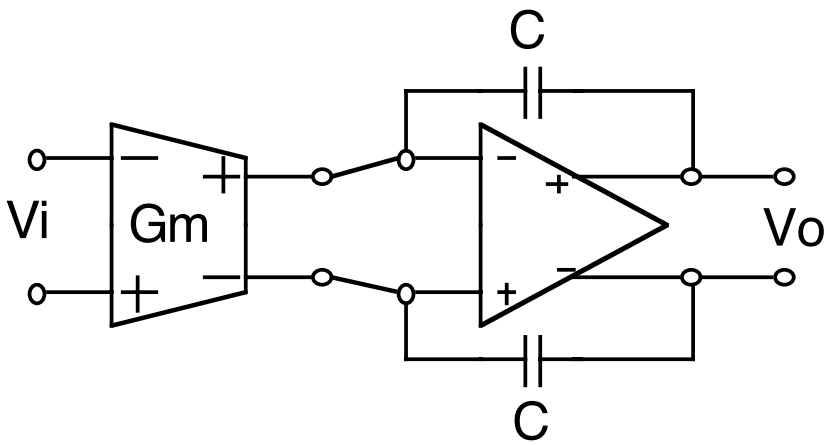

Switched-Capacitor

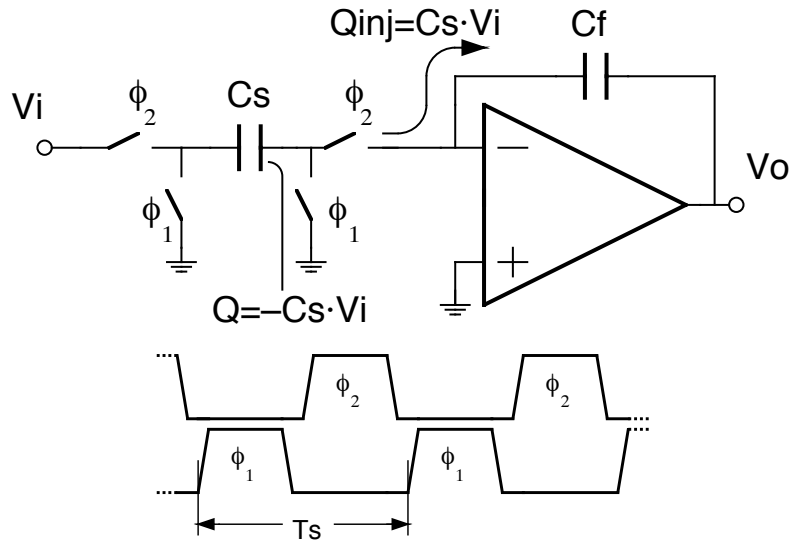

- ☺ Low-sensitivity to parasitics
- ☹ Largest number of active elements
- ☹ Extra poles i.e. not very fast

- ☺ Large input and output signals
- ☹ Insensitive to parasitic capacitance
- ☹ Larger number of active elements
- ☹ Clock needed & System complexity